PST Super Guide

A Comprehensive Guide to Compliance in Texas

TEXAS COMMISSION ON ENVIRONMENTAL QUALITY

RG-475 (revised 5/12)

PST Super Guide

A Comprehensive Guide to Compliance in Texas

TCEQ

TEXAS COMMISSION ON ENVIRONMENTAL QUALITY

RG-475 (revised 5/12)

Contents

TCEQ REGULATORY GUIDANCE
Small Business and Environmental Assistance Division
RG-475a ● Revised February 2011

Buying or Selling Property with Underground Storage Tanks

A guide for owners and operators of USTs

This is a general guide to laws and regulations about underground storage tanks and an aid in minimizing potential risks; it does not replace those laws and regulations, which take precedence over any information contained herein. If your tank system is located in Kinney, Uvalde, Medina, Bexar, Comal, Hays, Travis, or Williamson County, additional requirements related to the protection of the Edwards or the Trinity Aquifer may apply (Title 30, Texas Administrative Code [30 TAC], Chapters 213 and 214). In addition to the laws and TCEQ rules, local governments and other state and federal agencies may have rules that apply. The UST owner and operator are responsible for ensuring compliance with all applicable laws and regulations.

What should I do before I buy a gas station or a property with existing underground petroleum storage tanks?

Before making a purchase, you should determine two major issues:

1. Are all UST systems in compliance with all technical requirements?
2. Is there contamination on the property (either from one or more UST systems or from other sources, including historical or off-site sources)?

Keep in mind that you need as much information as possible from the previous owner to ensure technical compliance with applicable TCEQ rules. Installation records and documentation of compliance are invaluable and should be secured if at all possible. You may wish to secure estimates of cost to remove tanks, search for historical information on them, and ask the former owner for records of their installation, removal, upgrades, release detection, and corrosion protection, and other important documents related to their performance and maintenance. Ensure that any claims made by the seller can be verified with installation, removal, and compliance records. If those records are not available, you should consider spending what is necessary to create them. An environmental site assessment called a *Phase I assessment* is commonly conducted prior to a transfer of ownership of commercial property to identify potential environmental contamination. Additionally, a *Phase II assessment* is conducted to determine if there is contamination at the site. A Phase II assessment includes soil and groundwater samples.

Underground storage tanks may have previously been installed and registered at the property and since removed or placed permanently out of service. If the tanks have been permanently removed from service, you should request a copy of the Release Determination Report (form TCEQ-00621) or other report documenting the removal of the tank system and any confirmatory sampling that may have been conducted. It is essential for a prospective property owner to determine whether the TCEQ has issued a "no further action" letter to a previous owner, indicating that removal of such a UST from service has been concluded with agency concurrence that no further action is needed by the current owner. If no such letter has been issued, that means the agency has not given its final response to the permanent removal from service of the UST.

How can I obtain information about the underground storage tanks from the TCEQ?

- The **Petroleum Storage Tank Registration Database** can tell you whether a facility is registered with the TCEQ and gives technical information about registered PSTs. <www.tceq.texas.gov/goto/pst_reg_db>
- The **Leaking Petroleum Storage Tank Database Query page** can help you find current and historic information about known LPST sites. Look up information by owner, address, city, county, and other criteria. <www.tceq.texas.gov/goto/lpst_db_query>
- **The Compliance History Database.** State rules require the TCEQ to maintain and publish compliance histories for many of the companies, individuals, agencies, and other entities that it regulates. Histories become a rating of a customer's "distance from compliance." Poor ratings can cause denial of permits, stricter regulation, and higher penalties. It's important to remember that a buyer inherits the compliance history rating of the facility. <www11.tceq.texas.gov/oce/ch/>
- Check to see if there is a **pending enforcement action** against the current owner of the UST system on the property. The status of any pending or issued enforcement order is available at: <www.tceq.texas.gov/goto/pending_enforcement>
- You may also perform an **open-records request** online, or via e-mail, fax, or mail to obtain documents, pending applications, ongoing compliance or enforcement actions, or other records. <www.tceq.texas.gov/goto/records_request>
- For additional **current and historical registration information**, you may contact the PST Registration Team at 512-239-2160.
- For additional information on **cleanup requirements or UST technical requirements**, you may contact the Remediation Division at 512-239-2200.

What must I consider if there is contamination?

The TCEQ does not prevent the sale of LPST sites. All parties involved in the sale of property with an LPST should be aware of the cleanup requirements and potential costs. Although the TCEQ continues to hold a responsible party responsible for a cleanup even after property is sold (i.e., a party may not contract away environment liability once a release has been discovered), buyers are cautioned that they may also become responsible for performing any corrective action on their property. Parties may choose to minimize delays in real estate transactions if, rather than insisting on the final closure of the LPST site by the TCEQ prior to the property sale, they instead address this issue in the negotiated price or establish responsibility via contract, letter of credit, bond, or insurance. However, the TCEQ will not be bound by any agreement between the parties.

All interested parties should consider hiring a qualified environmental consultant and possibly an attorney to evaluate existing information. For a list of environmental consultants registered with the TCEQ, visit <www5.tceq.texas.gov/oce/olwe>or contact the Operator Licensing Section at 512-239-6139.

What are my options regarding existing UST systems?

If underground storage tanks remain in the ground, they are generally considered part of the property and are transferred with it, unless the seller specifically maintains ownership of them. The buyer is responsible for keeping (or making) the tanks compliant with applicable rules.

All UST systems must be maintained in compliance with applicable TCEQ rules, whether or not they are in use. If you are going to continue to use a UST system, it must comply with all technical and administrative requirements, including release detection, corrosion protection, spill- and overfill-prevention equipment, financial assurance, registration and self-certification, and recordkeeping (and any other requirements that apply). Request, from the seller, all existing records associated with the UST system, including installation documentation, owner's manuals, and compliance documentation. If those records are not available, you may be required to re-create them or perform additional tests and actions to keep the UST system in compliance.

If you are not going to use a UST system, one option for temporary removal from service is described at 30 TAC 334.54, and three options for permanent removal from service (along with additional information) are described at 30 TAC 334.55. Those three options are:

1. removal from the ground,
2. abandonment in place (proper emptying by a licensed UST contractor and filling with sand, cement, etc.), or

3. permanent change in service (storage of non-regulated substances).

Regardless of the option you choose, the work will need to be performed by a TCEQ-licensed UST contractor, and a comprehensive site assessment must be performed to determine whether a release has occurred from any part of the UST systems. For more information on permanent removal from service, see *Permanently Removing Petroleum Storage Tanks from Service*, TCEQ publication RG-475m.

It is a good business practice to secure bids on actions to ensure the tanks' compliance (removal, upgrades, soil samples to determine if contamination is present) **before taking ownership of the property.** There is no substitute for soil and groundwater sampling to determine if there is subsurface contamination.

What Do I Need to Report?

Responsibilities of sellers and purchasers of underground storage tanks				
	Written disclosure that the tank is regulated by the TCEQ before the property is transferred to the purchaser	Update of form listing tank status and ownership registration within 30 days of sale (Form TCEQ-00724)	Construction notification to TCEQ 30 days prior to major construction activities (Form TCEQ-00495)	Record keeping in accordance with 30 TAC 334.10
Seller	**X**			
Purchaser		**X**	**X**	**X**

Under 30 TAC 334.9, written notification from the seller to the buyer must include the names and addresses of the seller (or grantor) and the purchaser (or grantee), the number of tanks involved, a description of each tank (capacity, tank material, and product stored, if applicable), and the agency's designated facility identification number (if the entire facility is being conveyed). The following certification statement is sufficient:

The underground storage tank (or tanks) included in this conveyance is (are) presumed to be regulated by the Texas Commission on Environmental Quality and may be subject to certain requirements for registration, compliance self-certification, and construction notification, and other requirements found in Title 30, Texas Administrative Code, Chapter 334.

For further information regarding tank registration, refer to *Petroleum Storage Tank Registration and Self Certification,* TCEQ publication RG-475d.

Where do I find more information?

Laws and regulations pertaining to the PST program are found in Texas Water Code, Chapter 26, Subchapter I, and at 30 TAC 334.

The complete UST technical standards may be found at 30 TAC 334, Subchapter C.

Guidance for conducting assessment and corrective action at leaking UST sites is available in *Investigating and Reporting Releases from Petroleum Storage Tanks* (TCEQ publication no. RG-411).

Search for TCEQ publications online at <www.tceq.texas.gov/publications>.

For confidential environmental compliance assistance for small businesses and local governments, contact Small Business and Local Government Assistance via the hotline at 800-447-2827 or online at <www.TexasEnviroHelp.org>.

Definitions

Corrective action. Any assessment, monitoring, or remedial activity undertaken to investigate the extent of contamination or to remediate it.

Major construction activities. Includes removal of a tank from service; repairs to a tank, piping, or other parts of a tank system; and most other construction associated with tank systems.

TCEQ REGULATORY GUIDANCE
Small Business and Environmental Assistance Division
RG-475b ● Revised March 2011

Installing a New or Replacement Underground Storage Tank

A guide for owners and operators of USTs

This is a general guide to laws and regulations about underground storage tanks and an aid in minimizing potential risks; it does not replace those laws and regulations, which take precedence over any information contained herein. If your tank system is located in Kinney, Uvalde, Medina, Bexar, Comal, Hays, Travis, or Williamson County, additional requirements related to the protection of the Edwards or the Trinity Aquifer may apply (Title 30, Texas Administrative Code [30 TAC], Chapters 213 and 214). Besides the TCEQ, local governments and other state and federal agencies may have rules that apply. The owner and operator are responsible for ensuring compliance with all applicable regulations.

What are the requirements?

A licensed UST installer–on-site supervisor employed by a registered UST Contractor is required for installation of UST systems. Generally, a registered contractor will know the details of how to comply with TCEQ standards; however, compliance is ultimately the owner's responsibility. It is helpful for the owner to know the basic requirements and to become familiar with terminology and options.

Specific standards for equipment and installation procedures may be found in 30 TAC 334 and, in some instances, petroleum-industry references and recommended practices. In those cases, the most recent version of the recommended practice is in effect. For more information on licensing requirements, please refer to module RG-475c, *Licensed Underground Storage Tank Contractors.*

Submit a construction notification form to the TCEQ (form TCEQ-00495) at least 30 days prior to performing work. Between 24 and 72 hours before work on the proposed activity begins, the owner must verbally notify the agency's appropriate regional office. Many times the registered contractor gives notice, but it is ultimately the responsibility of the owner. Coordinate with your contractor to determine who will make the notification.

New tanks and piping must meet specific standards for structural integrity and protection from corrosion. For example, a steel tank must have a fiberglass or polyurethane coating, bond, or jacket that meets specific standards. Additionally, all tank systems must be installed with appropriate spill- and overfill-prevention equipment and be monitored for releases.

New UST systems must be installed to meet requirements for spill, overfill, and release detection, and must have striker plates under all fill and gauge openings.

Tanks may be constructed of coated and cathodically protected steel; steel with an external factory-applied, fiberglass-reinforced plastic; steel with a polyurethane cladding or jacket; or fiberglass-reinforced plastic.

Piping may be constructed of fiberglass-reinforced plastic, coated and cathodically protected steel, or flexible non-metallic material. Flexible connectors must be installed at both ends of a pressurized piping system unless the piping is inherently flexible. For pressurized piping systems, shear or emergency-shutoff valves must be properly installed and anchored. Tanks, piping, and shear valves must be constructed in accordance with applicable standards.

An appropriate number of observation wells 4 inches in diameter or larger must be installed in each tank hole. A tank hole containing only one tank is required to contain at least one observation well; a tank hole containing two or more tanks must contain at least two wells.

The installer must use clean, washed, suitably graded and noncorrosive sand, crushed rock, or pea-gravel backfill that is selected and placed in accordance with the tank and piping manufacturers' specifications.

To prevent flotation of the tanks, an anchoring system is required for all USTs located in areas subject to high water tables or flooding. The anchoring system must meet the tank manufacturer's specifications and applicable TCEQ requirements.

The piping system must slope at least 1/8 inch per foot from the dispenser toward the tank.

Prior to initial use, the tanks and piping must be tested to ensure that there are no leaks in the system.

Registration is required within 30 days of the initial delivery of any regulated substance. Use form TCEQ-00724. Any tank-installation or underground-installation activities must also be certified on that form by the responsible UST installer or on-site supervisor. Factors to consider when installing a UST system include:

- the cost of insurance for the type of system installed
- the geographic location of the tank system
- release-detection options

For UST systems installed after Jan. 1, 2009

Owners and operators must install secondary containment for new and replacement tanks and new piping. Any piping replacement that affects 20 percent or less of the total original length of an existing single-wall line

does not require secondary containment unless the replaced line segment connects the existing line to a new dispenser, in which case the entire line must be secondarily contained. External liners do not meet secondary containment requirements for systems installed after Jan. 1, 2009. Owners and operators must also monitor the interstitial space (the space between the primary and secondary wall) for a release of product.

Owners and operators must install dispenser sumps with any new dispenser.

All sumps and manways used as an integral part of a UST release detection system and all sumps which serve new dispensers installed on or after Jan. 1, 2009, must be:

- compatible with the stored substance;
- installed and maintained in a manner that assures that sides, bottoms, and penetration points are liquid tight;
- tightness-tested at installation and every three years thereafter; and
- equipped with a liquid-sensing probe that will alert the UST system owner or operator if more than 2 inches of liquid collects in any sump or manway.

Owners and operators must properly dispose of any liquid detected by alarms or any liquids or debris found during an inspection within 72 hours of discovery.

For UST systems installed over the Edwards or Trinity Aquifer

If your UST system is being installed over the Edwards or Trinity Aquifer, specific requirements apply that may be found in 30 TAC 213 and 214, respectively.

What records do I need to keep?

You must retain documentation of installations, certifications, notifications, reports, inspections, registration, as-built plans, specifications, revisions, modifications, integrity assessment, components, warranties, instructions, recommendations, schedules, and telephone numbers of contacts and service technicians for the life of the system. Certain other equipment records, including records of air and tightness tests, must be kept for at least five years after installation.

Where can I find more information?

The requirements for new technical and installation standards are at 30 TAC 334.45–46.

You can download forms from the TCEQ's website at <www.tceq.texas.gov/forms>.

You can download publications from the TCEQ's website at <www.tceq.texas.gov/publications>.

For confidential environmental compliance assistance for small businesses and local governments, contact Small Business and Local Government Assistance via the hotline at 800-447-2827 or online at <www.TexasEnviroHelp.org>.

Industry Recommended Practices

Petroleum Equipment Institute Publication RP-100, *Recommended Practices for Installation of Underground Liquid Storage Systems.*
<www.pei.org/>

American Petroleum Institute Publication 1615, *Installation of Underground Petroleum Storage Systems.*
<www.api.org/>

TCEQ REGULATORY GUIDANCE
Small Business and Environmental Assistance Division
RG-475c ● March 2011

Licensed Underground Storage Tank Contractors

Selecting the proper contractor to work on your UST system

This is a general guide to laws and regulations about underground and aboveground storage tanks and an aid in minimizing potential risks; it does not replace those laws and regulations, which take precedence over any information contained herein. If your tank system is located in Kinney, Uvalde, Medina, Bexar, Comal, Hays, Travis, or Williamson County, additional requirements related to the protection of the Edwards or the Trinity Aquifer may apply (Title 30, Texas Administrative Code [30 TAC], Chapters 213 and 214). In addition to the laws and TCEQ rules, local governments and other state and federal agencies may have rules that apply. The owner and operator are responsible for ensuring compliance with all applicable laws and regulations.

Who Should I Hire?

The TCEQ regulates occupational licenses and registrations with regard to underground storage tanks. It is important that you contract with the appropriate company or person to perform any necessary work. See 30 TAC 30 (Occupational Licenses and Registrations), Subchapters E (Leaking Petroleum Storage Tank Corrective Action Project Managers and Specialists) and I (Underground Storage Tank On-Site Supervisor Licensing and Contractor Registration).

Why do I need a Licensed Contractor?

Licensing and registration requirements exist because working on a UST system requires detailed technical knowledge. Be sure to check the expiration date on the contractor's license and ask for proof of liability insurance before allowing work to begin on your UST system. This guide should help you to determine when to use a licensed person to perform work on your UST system.

Definitions

Underground storage tank contractor. A person (business or individual) that installs, repairs, or removes a UST (or offers to, or self-represents as able to, do so) and meets registration requirements.

On-site supervisor. An individual who supervises the installation, repair, or removal of a UST and who meets licensing requirements. There are three levels of licensing, each with its own responsibilities.

Critical juncture. Any of the following steps:

- repairing the tank bedding immediately before receiving a tank
- setting a tank and its piping, including placement of anchoring devices, backfilling to the level of the tank, and strapping
- connecting piping systems to a tank
- pressure testing a UST and its associated piping during installation
- completing backfill and filling the excavation
- any repair involving connection (or reconnection) of a piping system to a tank and related testing of the tank or its associated piping
- removal of the UST

Corrosion specialist. An individual who has a professional degree and related experience, and is certified by the National Association of Corrosion Engineers International or is licensed as a professional engineer in Texas in a branch of engineering that includes education and experience in corrosion control of metal tanks and piping.

Corrosion technician. A person who is qualified by training and experience and who is certified by the National Association of Corrosion Engineers International, employed under the direct supervision of a corrosion specialist, or certified as a cathodic-protection tester by the NACE or the Steel Tank Institute.

Corrective action. Any cleanup of contamination, or assessment (after discovery), monitoring, or investigation of its extent.

LPST Corrective Action Specialist (CAS). A company registered with the TCEQ to perform regulated corrective actions at LPST sites that has two years of experience.

LPST Corrective Action Project Manager (CAPM). A person who is licensed with the TCEQ to perform or supervise regulated corrective actions at leaking petroleum storage tank sites.

Contractors for Leaking Petroleum Storage Tanks

Once a leak is confirmed, an LPST contractor is needed to perform regulated corrective actions on the underground storage tanks. A corrective action specialist must be registered with the TCEQ in order to perform corrective actions at an LPST site. In general, a corrective action project manager is required to be on the LPST site while work is conducted there. Registered LPST corrective action specialists are required to maintain at least $1 million of liability insurance. For more information, reference module RG-475h, *Suspected Releases from Petroleum Storage Tanks*.

Table 1 indicates which licensees can perform various tasks related to a UST system.

Table 1. UST license levels and work the license holders can perform.

UST Contractor License	*On-Site Supervisor A*	*On-Site Supervisor B*	*On-Site Supervisor Class A/B Combination*	*Corrosion Specialist*	Corrosion Technician
UST Installation	X		X		
Repair (upgrades and replacements)	X		X		
Removal		X	X		
Design of corrosion protection system				X	
Corrosion testing				X	X
Pressure testing (during installation and repair)	X				
Secondary containment	X		X		
Installation or replacement of vent lines	X		X		
Installation or replacement of submersible pumps	X		X		
Installation of equipment to test tightness of tank or piping	X		X		
Installing permanent release detection and monitoring equipment	X		X		
Adding or replacing spill or overfill equipment	X		X		
Installation of stage I or stage II equipment	X		X		

- **A registered UST contractor is required to maintain $1 million liability insurance.**
- **A UST contractor must have a supervisor on-site at all times during critical junctures of installation, repair or removal.**
- **A UST contractor must prominently display his or her registration number on all bids, proposals, offers, and installation drawings.**

Exceptions from Licensing

The following activities do not require using licensed companies or individuals:

- emergency actions to stop leaks or ruptures
- work on a UST system under the direct supervision of a licensed on-site supervisor
- work on a system that is not regulated under 30 TAC 334

Where do I find more information?

TCEQ Rules—30 TAC 30, Subchapters E and I:
<http://info.sos.state.tx.us/pls/pub/readtac$ext.ViewTAC?tac_view=5&ti=30&pt=1&ch=30&sch=E&rl=Y >
<http://info.sos.state.tx.us/pls/pub/readtac$ext.ViewTAC?tac_view=5&ti=30&pt=1&ch=30&sch=I&rl=Y>

Complete online list of licensed contractors:
<www5.tceq.texas.gov/oce/olwe/>

About field citations:
<www.tceq.texas.gov/goto/field_citation>

Sample field citation:
<www.tceq.texas.gov/assets/public/compliance/field_ops/citation/20270pst-web-version.pdf>

For confidential environmental compliance assistance for small businesses and local governments, contact Small Business and Local Government Assistance via the hot line at 800-447-2827 or online at <www.TexasEnviroHelp.org>.

TCEQ REGULATORY GUIDANCE

Small Business and Environmental Assistance Division
RG-475d ● April 2011

Petroleum Storage Tank Registration and Self-Certification

A guide for owners and operators of underground storage tanks (USTs)

This is a general guide to laws and regulations about underground and aboveground storage tanks and an aid in minimizing potential risks; it does not replace those laws and regulations, which take precedence over any information contained herein. If your tank system is located in Kinney, Uvalde, Medina, Bexar, Comal, Hays, Travis, or Williamson County, additional requirements related to the protection of the Edwards or the Trinity Aquifer may apply (Title 30, Texas Administrative Code [30 TAC], Chapters 213 and 214). In addition to the laws and TCEQ rules, local governments and other state and federal agencies may have rules that apply. The owner and operator are responsible for ensuring compliance with all applicable laws and regulations.

When is a UST subject to regulation?

A UST is regulated under 30 TAC 334 if it contains a regulated substance and 10 percent or more of its volume lies below the surface of the ground. Regulated substances include hazardous substances and petroleum substances such as gasoline, diesel, motor oil, waste oil, kerosene, jet fuel, and aviation gasoline and other petroleum derivatives. For further clarification on whether your UST is subject to state regulation, please contact the Petroleum Storage Tank Registration Team at 512-239-2160.

What are UST registration and self-certification? How do I self-certify or register my tanks?

Registration is how the owner or operator informs the TCEQ about its UST systems. Self-certification is how the owner or operator of a **motor-fuel** UST system notifies the TCEQ that it complies with certain technical and administrative requirements, and is necessary for the owner-operator to obtain a fuel-delivery certificate. *Motor fuel* is defined as 'A petroleum substance which is typically used for the operation of internal combustion engines (including stationary engines and engines used in motor vehicles, aircraft, and marine vessels), and which is one of the following types of fuels: motor gasoline, aviation gasoline, Number 1 diesel fuel, Number 2 diesel fuel, biodiesel blended with Number 1 or Number 2 diesel, gasohol, or other alcohol blended fuels. Both registration and self-certification entail the submission of core data to the TCEQ Central Registry, and both are accomplished using the

UST Registration and Self-Certification Form (TCEQ-00724), available online at <www.tceq.texas.gov/forms>.

Self-certification is required annually for USTs containing motor fuel. The owner or operator must certify that the UST system is in compliance with technical standards and requirements for registration and financial assurance, and that all fees due to the TCEQ are paid. A current certificate of insurance (or other proof of financial assurance) must be submitted at the time of self-certification. Once the form is processed, the TCEQ will issue you a fuel delivery certificate authorizing delivery of fuel. Receiving fuel without a current, valid fuel delivery certificate is a violation of TCEQ rules and may result in fines and penalties.

An important part of self-certification involves identifying each tank. Once a tank has been listed on the form TCEQ-00724, a permanent label must be affixed on or near the tank, allowing a physical match of the tank in the ground with the one listed on the self-certification form. It is not necessary to indicate the fuel grade on the permanent label, but the tank number (and compartment letter, if applicable) must be visible.

Registration is required for all regulated USTs that contain or have contained a regulated substance, unless otherwise exempted or excluded (30 TAC 334.3–4). Common exemptions and exclusions include farm or residential tanks with a capacity of 1,100 gallons or less, tanks that contain heating oil, flow-through-process tanks, and septic tanks.

Core Data for the Central Registry are reported on the first two sheets of the UST form. If you have any questions related to the first two pages of the form, please call TCEQ Central Registry at 512-239-5175.

When do I need to submit form TCEQ-00724?

Submitting this form is required when a UST is installed or temporarily or permanently removed from service. Owners-operators must submit to the TCEQ any changes in ownership, address, or phone number, or other required information (including technical data or changes in financial assurance). The form must be submitted within **30 days** of any such change.

Each year, owners-operators of USTs with motor fuels must renew their facility's fuel-delivery certificate to maintain authorization to receive fuel. About 45 days before the annual renewal is due, the TCEQ mails a reminder to the address on record. However, it is the responsibility of the owner or operator to submit a complete self-certification form before the current certificate expires. An incomplete or inaccurate self-certification form will be returned to the applicant for completion or correction before the TCEQ will issue a new fuel-delivery certificate.

When a UST system changes owners or operators an existing fuel-delivery certificate is only valid for 30 days following the change in responsibility for the system. It is essential that the new owner or operator submit a new

self-certification form as soon as possible to ensure that the certificate remains valid.

When will my fuel-delivery certificate expire?

Look at the last digit of the official TCEQ identification number for the registered owner of the UST facility. **Table 1** shows when the certificate will expire.

Table 1. Expiration dates for fuel-delivery certificates.

If the owner number ends in	Certificate expires	Renewal date	You must post your new delivery certificate on
1	Jan 31	Jan 2	Feb 1
2	last day of Feb	Jan 30 (in leap year, Jan 31)	Mar 1
3	Mar 31	Mar 2	Apr 1
4	Apr 30	Apr 1	May 1
5	May 31	May 2	Jun 1
6	Jun 30	Jun 1	Jul 1
7	Jul 31	Jul 2	Aug 1
8	Aug 31	Aug 2	Sep 1
9	Sep 30	Sep 1	Oct 1
0	Oct 31	Oct 2	Nov 1

Which parts of the form must be completed for an initial registration?

When initially registering your UST system, please complete the entire form so we can track the information in our database. Completion of Section 12 ensures accurate reporting of technical compliance.

What parts of the form do I fill out for first-time self-certification?

When submitting the form for self-certification for the first time, you must complete sections 1, 2, 3, 4, 7, 8, 9, 11 and 12.

Which parts of the form must be completed for subsequent annual self-certification filings?

When submitting the form for subsequent annual self-certification filings, you must complete sections 1, 2, 3, 4, 7, 8, and 9 and any other section of the form where information has changed. The TCEQ will return incomplete forms.

Do I have to pay a fee?

Beginning Sept. 1, 2007, UST owners are no longer assessed annual registration fees. However, unpaid annual fees assessed prior to Sept. 1, 2007 are the owner's responsibility.

What records do I need to keep?

Make a copy of your registration and self-certification form before you submit it to the TCEQ. Keep all installation records for your tank and piping system for the life of the system, and all records that document compliance with applicable rules for at least five years (such as periodic testing records, tank-monitoring reports, proof of financial assurance, etc.).

Do I need financial assurance?

Owners or operators of an UST must demonstrate financial assurance for corrective action and third-party pollution liability (environmental-cleanup coverage), except for owners and operators of any UST system exempted under 30 TAC 334.3 or excluded under 30 TAC 334.4, or a state or federal authority described in 30 TAC 37.801(b) (Applicability). Financial-assurance requirements for USTs can be found at 30 TAC 37, Subchapter I. For additional information on financial assurance, please see module RG-475k.

Where do I find more information?

The complete requirements for registration and self-certification appear at 30 TAC 334.7–8.

For questions concerning completion of the form or about the information reported on the form, please contact the **Petroleum Storage Tank Registration and Self-Certification Team** at 512-239-2160.

Download the form for registration and self-certification: <www.tceq.texas.gov/assets/public/permitting/rrr/forms/0724.pdf>.

For confidential environmental compliance assistance for small businesses and local governments, contact Small Business and Local Government Assistance via the hotline at 800-447-2827 or online at <www.TexasEnviroHelp.org >.

TCEQ REGULATORY GUIDANCE

Small Business and Environmental Assistance Division
RG-475e ● Revised April 2011

Petroleum Storage Tank Spill and Overfill Prevention

A guide for owners and operators of underground storage tanks (USTs)

Introduction

This is a general guide to laws and regulations about underground storage tanks and an aid in minimizing potential risks; it does not replace those laws and regulations, which take precedence over any information contained herein. If your tank system is located in Kinney, Uvalde, Medina, Bexar, Comal, Hays, Travis, or Williamson County, additional requirements related to the protection of the Edwards or the Trinity Aquifer may apply (Title 30, Texas Administrative Code [30 TAC], Chapters 213 and 214). In addition to the laws and TCEQ rules, local governments and other state and federal agencies may have rules that apply. The owner and operator are responsible ensuring compliance with all applicable laws and regulations.

How can releases from USTs be prevented?

The TCEQ has adopted technical regulations requiring owners and operators of UST systems to prevent spills and other releases, overfills, and corrosion. Spills and overfills result mainly from bad filling practices. In addition, unprotected steel tanks and piping can corrode and release product through holes caused by corrosion of the metal tank or piping. See module RG-475f, *Protecting Petroleum Storage Tanks against Corrosion*, for additional information. Regulations pertaining to spill and overfill prevention located in 30 TAC 334.51 list the equipment required as well as defining proper fill procedures, maintenance, and record keeping.

What is spill and overfill prevention? What is its purpose?

Spill and overfill prevention relies on equipment designed to prevent releases to the environment during filling of a UST. The purpose of spill and overfill prevention is to prevent cleanup of contamination that may occur when the UST is filled. Overfills and repetitive spills can result in significant cleanup costs.

What are my options?

Three pieces of equipment are required to meet spill and overfill prevention requirements: a tight-fill fitting, a spill container, and an overfill device.

- **Tight-fill fitting:** The fill pipe of the tank must be equipped with a tight-fill fitting, adapter, or similar device to ensure a liquid-tight seal during the transfer of product into the tank. Such a fitting between the delivery hose and the UST's fill port reduces the likelihood of a leak.
- **Spill-container equipment:** The fill tube must either be fitted with a spill bucket or enclosed in a liquid-tight manway, riser, or sump. The spill bucket must be designed to minimize entry of surface water, groundwater, or any other substance. Facilities with vapor-recovery equipment may have a vapor-tight drain valve. Spill-containing equipment catches any product from the delivery hose and is located at ground level, surrounding the tight-fill fitting. Spill buckets should be kept clear of debris and water at all times.
- **Overfill-prevention device:** Each tank is required to have a valve or other device that will prevent overfilling of the tank. There are three basic options:
  1. automatic shutoff
  2. automatic flow restrictor
  3. audible alarm with flow restrictor or automatic shutoff

What are spill buckets?

A spill bucket, also known as a *spill-containment manhole* or a *catchment basin,* is a bucket sealed around the fill pipe (see Figure 1). Try to keep water out of spill buckets—some can collect enough water and sediment, along with spilled product, to make draining this mixture into the tank unwise. If that happens, pump out the spill bucket and dispose of the liquid properly. If the liquid contains fuel or chemicals, it could be considered a hazardous waste.

Figure 1. Spill bucket.

Manufacturers equip spill buckets with either pumps or drains to remove liquid. See Figure 2.

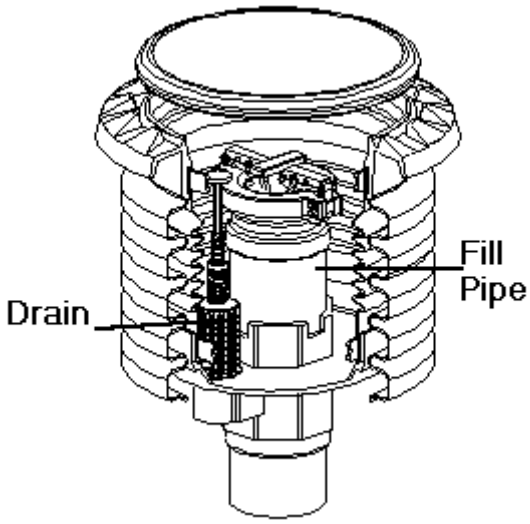

Figure 2. Spill bucket with a drain valve.

What is an automatic shutoff?

An **automatic shutoff** stops flow of product into the tank at a preset level (never more than 95 percent of the tank volume). The most common shutoff devices have a flapper or float (Figure 3) which rises as the tank is filled. Then, when the liquid reaches the preset level, the flapper or float shuts off the flow (Figure 4). The shutoff is most commonly installed in the drop tube.

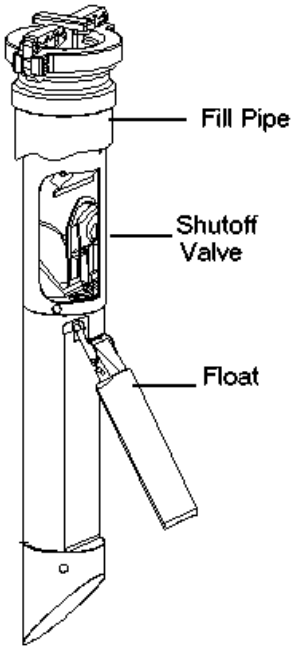

Figure 3. Automatic shutoff device with the float down and the fill valve open.

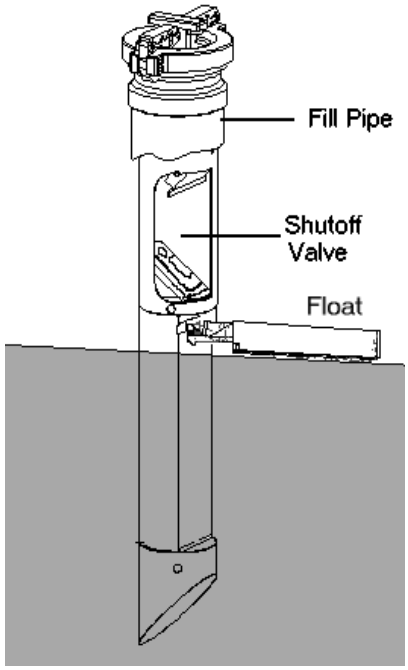

Figure 4. Automatic shutoff device with the float up and the fill valve closed.

What is an automatic flow restrictor?

An **automatic flow restrictor** must restrict flow to the tank above a preset level which never exceeds 90 percent of the volume of the tank. A ball-float valve (Figures 5, 6), the most common flow restrictor, is usually installed in the vent line or in a separate, dedicated portal.

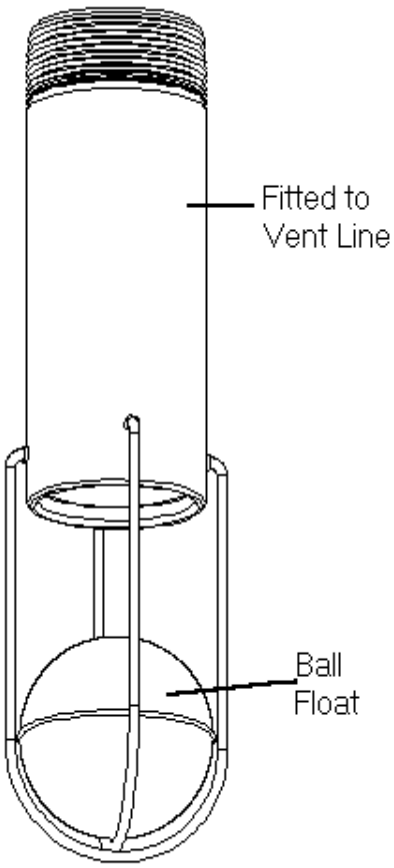

Figure 5. Ball-float valve with the ball at the bottom of the cage and the vent line open. The product is below the cage.

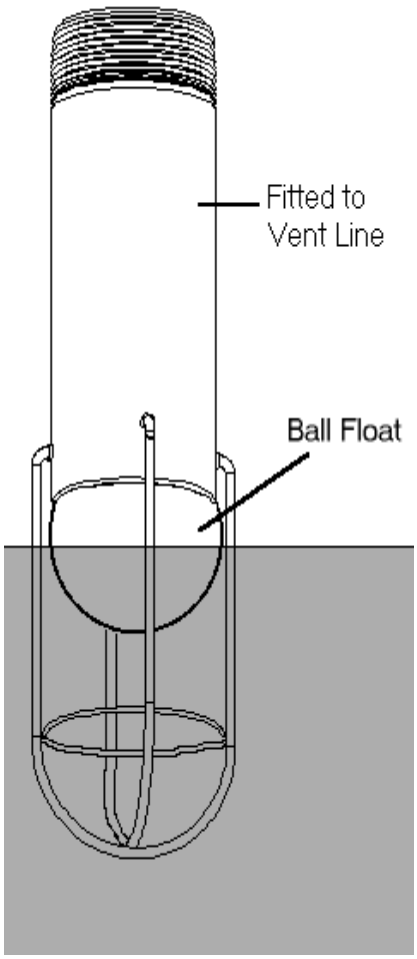

Figure 6. The **ball-float valve** rises as the product rises. The ball eventually seats in the vent line and restricts vapor flowing out of the vent before the tank is full.

Can I use an audible alarm as an overfill device?

An **audible alarm** that is emitted when the level reaches 90 percent of the tank's volume may be used as an overfill device if used in conjunction with either a flow restrictor or shutoff set at 98 percent of the tank volume.

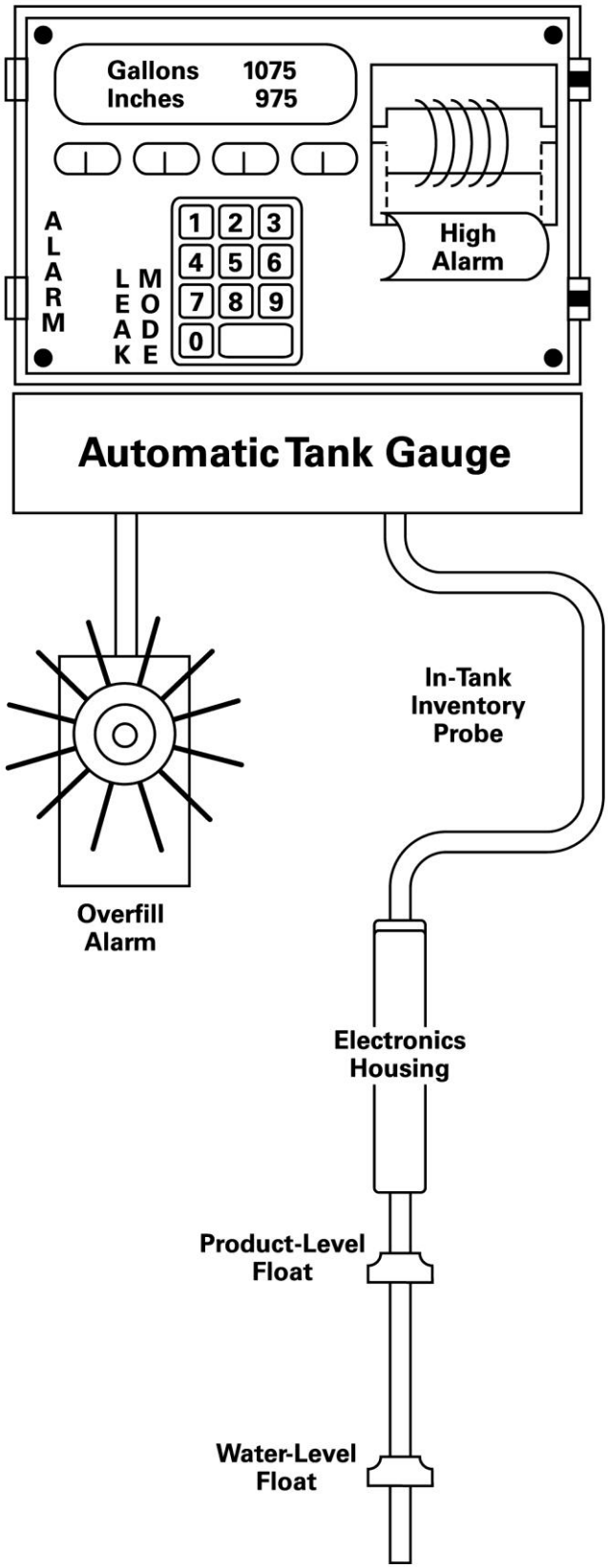

Figure 7. Overfill alarm.

How often do I need to inspect spill containers?

Effective October 30, 2008, all spill containers, regardless of their date of installation, need to be inspected to ensure they are liquid tight at least once every 60 days. The owner or operator should make sure that the spill container's sides and bottoms and any penetration points are liquid tight. Remove and properly dispose of any liquids or debris found during the inspection within 96 hours of discovery. To document compliance with this requirement, keep a logbook with the date of inspection, the result, and name of the person performing the inspection. A sample inspection form is included with this document.

What records do I need to keep?

Generally you need to keep records to document you're operating your UST system in compliance with applicable rules, including 60-day inspection records. Installation records documenting the installation should be kept as long as the equipment is in use.

Where do I find more information?

The complete requirements for spill and overfill prevention may be found at 30 TAC 334.51.

See the EPA publication *UST Systems: Inspecting and Maintaining Sumps and Spill Buckets,* EPA 510-R-05-001

Search for TCEQ publications online at <www.tceq.texas.gov/publications>.

For confidential environmental compliance assistance for small businesses and local governments, contact Small Business and Local Government Assistance via the hotline at 800-447-2827 or online at <www.TexasEnviroHelp.org>.

60-Day Spill-Container Inspection

If you have questions on how to complete this form or about the Petroleum Storage Tank (PST) program, please contact Small Business and Local Government Assistance at its hotline, 800-447-2827 or online at <www.TexasEnviroHelp.org>.

Facility Information

Facility Name:	**Facility ID No.:**
Street Address:	**City, State, Zip:**

Instructions

- This form may be used to document compliance with the 60-day inspection requirement for spill containers.
- Inspect all spill containers to ensure that their sides, bottoms, and any penetration points are liquid tight.
- Remove and properly dispose of any liquids or debris found during the inspection within 96 hours of discovery.
- Keep this form on file for at least 5 years

Inspection Log for Spill Container

Date Inspected	Result	Inspector Initials	Comments, including date emptied

Date Inspected	Result	Inspector Initials	Comments, including date emptied

TCEQ REGULATORY GUIDANCE
Small Business and Environmental Assistance Division
RG-475f ● August 2009

Protecting Petroleum Storage Tanks against Corrosion

A guide for owners and operators of underground storage tanks

This is a general guide to laws and regulations about underground and aboveground storage tanks and an aid in minimizing potential risks; it does not replace those laws and regulations, which take precedence over any information contained herein. If your tank system is located in Kinney, Uvalde, Medina, Bexar, Comal, Hays, Travis, or Williamson County, additional requirements related to the protection of the Edwards or the Trinity Aquifer may apply (Title 30, Texas Administrative Code [30 TAC], Chapters 213 and 214). In addition to the laws and TCEQ rules, local governments and other state and federal agencies may have rules that apply. The owner and operator are responsible for ensuring compliance with all applicable laws and regulations.

What is corrosion protection and what is its purpose?

Corrosion protection is a method of slowing or preventing metal components of a UST system from rusting or otherwise corroding or oxidizing. Its purpose to ensure the structural integrity of the UST system so releases do not occur. All buried UST system components that store or convey regulated substances (such as gasoline, diesel, or used oil) are required to be properly protected from corrosion, regardless of age, date of installation, or operational status.

What are my options?

Since Dec. 22, 1988, all newly installed USTs have been required to meet comprehensive corrosion protection standards.

Acceptable methods of corrosion protection include:

1. **Noncorrodible material.** Use of a material that will not corrode when exposed to soil or water, such as fiberglass for tanks or piping. If the entire system is noncorrodible, the flexible connectors are the only metal components that need to protection.
2. **Electrical isolation** involves the protection of below ground metal components by putting them in an open area such as a sump, manway, vault, or pit.
3. **Secondary containment** is a method of installing a wall or jacket around metal tanks or piping that meets specific standards for corrosion protection and protects the primary wall of the steel tank from the corrosive elements of the soil and groundwater.

What is cathodic protection?

Cathodic protection is an option for protecting a UST system from corrosion.

There are two types of cathodic protection systems: sacrificial and impressed current.

- **Sacrificial anode.** An anode is connected to the metal structure. The anode, usually made of zinc or magnesium, is wired to the metal component and corrodes instead of the tank or piping. This method is usually used on smaller structures, such as flexible connectors that connect fiberglass piping to a fiberglass tank.
- **Impressed current.** Through anodes connected to the system through a rectifier, an electrical current is introduced that will inhibit the corrosion of metal components to the system. The anode is wired to the tank in the same manner as in the sacrificial system, but the metal component has such a large surface area that it requires greater protection. A rectifier pushes a low-voltage current through the impressed current cathodic system. The rectifier is usually located on the wall of the facility and has a gauge capable of reading the voltage output of the system.

Federal regulations require that the cathodic protection system be installed and designed by a corrosion specialist. In Texas, a corrosion specialist must be a licensed professional engineer, or designated as a corrosion specialist by a nationally recognized trade group, such as the National Association of Corrosion Engineers.

Once the cathodic protection system is installed, it must be tested by a corrosion specialist three to six months after installation and every three years thereafter. An operational test for impressed current systems is also required every 60 days to ensure that the rectifier is working properly. This operational test may be performed by the owner or operator of the UST system. Wildly varied rectifier readings may indicate a problem, and you should contact your corrosion specialist or corrosion technician for specific instructions. Rectifier readings should be kept for at least five years.

Testing frequency

All corrosion-protection systems must be tested at installation, three to six months later, and every three years after. Additionally, for impressed current systems, the rectifier must be read every 60 days.

What records do I need to keep?

Generally you need to keep records to document that you are operating your UST system in compliance with applicable rules. Keep all installation documentation relating to corrosion protection, including information from the manufacturer of the tank and piping and cathodic protection system. Keep a log of all rectifier readings and test records. A sample blank log follows this

document. Keep all test records and log readings for at least five years. Installation records should be kept for the life of the UST system.

Where do I find more information?

The complete requirements for corrosion protection may be found at 30 TAC 334.49.

The National Association of Corrosion Engineers Web site at <www.nace.org> has a list of corrosion specialists and corrosion technicians.

For confidential environmental compliance assistance for small businesses and local governments, contact Small Business and Local Government Assistance via the hot line at 800-447-2827 or online at <www.sblga.info>.

60-Day Record of Impressed Current Cathodic Protection

If you have questions on how to complete this form or about the Petroleum Storage Tank (PST) program, please contact Small Business and Local Government Assistance at its hot line, 800-447-2827, or online at <www.sblga.info>.

Facility Information

Facility Name:	**Facility ID No.:**
Street Address:	**City, State, Zip:**

Instructions

- This form may be used to document operational checks of the cathodic protection system rectifier at least once every 60 days.
- If your rectifier is so equipped, you should also record the output voltage and current, and the number of hours indicated on the meter.
- Any significant variance should be reported to your corrosion professional so that any necessary repairs or adjustments can be made.
- Every three years your cathodic protection should be tested by a corrosion specialist or corrosion technician.
- Keep this form on file for at least five years.

Impressed Current Rectifier Data

Rectifier Manufacturer:	**Rated DC Output:** _____Volts _____Amps
Rectifier Model:	**Rectifier Serial Number:**
What is the "as designed" or most recently recommended rectifier output? _____Volts _____Amps	

Log of Rectifier Operation

Date Inspected	Rectifier Turned	Tap Setting		DC Output		Hour Meter	Inspector Initials	Comments
		Coarse	Fine	Volts	Amps			

TCEQ REGULATORY GUIDANCE
Small Business and Environmental Assistance Division
RG-475g ● Revised January 2012

Release Detection and Inventory Control for Petroleum Storage Tanks

Methods for underground storage tanks and product piping

This is a general guide to laws and regulations for underground storage tanks and an aid in minimizing potential risks; it does not replace those laws and regulations, which take precedence over any information in this publication. If your UST system is located in Kinney, Uvalde, Medina, Bexar, Comal, Hays, Travis, or Williamson county, additional requirements related to protecting the Edwards or the Trinity aquifer may apply (Title 30, Texas Administrative Code [30 TAC], Chapters 213 and 214). In addition to the laws and TCEQ rules, local governments and other state and federal agencies may have rules that apply. The owner and operator are responsible for ensuring compliance with all applicable laws and regulations.

What is release detection?

Release detection is a way to determine if your underground storage tank system is leaking. Release detection allows the owner-operator of a UST system, once a month, to ensure that the tanks and piping are not releasing a petroleum substance into the soil or groundwater. All UST systems are required to have an approved monthly release-detection method. You may also hear the phrase *leak detection*—it means the same as 'release detection.'

Why is it required?

Release detection is necessary to prevent or minimize releases of regulated substances (gasoline, diesel, used oil, etc.) into the environment. It involves periodic monitoring of your tanks and piping for leaks. Such leaks not only can contaminate soil and groundwater, but also incur a cost to you in lost product and remediation expenses in the event of a release. Effective detection allows for a quick response to signs of leaks. Early action on your part protects the environment, while also protecting you from the high costs of cleaning up leaks and responding to liability claims. Often, when releases from UST systems occur, the petroleum substance can affect soil or groundwater over an area much larger than the property on which the tanks are located, affecting other parties, and increasing the cost of cleanup.

Remember that release detection applies to both tanks and product piping. Together, the tanks and piping are referred to as a "UST system." For the TCEQ, PST rules apply to the UST system underground up to the point where piping exits the ground, leading to the dispenser. Leak detection only affects that part of the UST system that is installed below ground, not dispensers or aboveground equipment.

Many methods are available for monitoring your tanks and piping for leaks, and they may be used in multiple combinations to achieve compliance. Some methods cover tanks only, some cover piping only, and some cover both tank and piping. It's important that you look at release detection not just as something required of an owner or operator, but also as a tool that will help you to make sure a regulated substance is not leaking from your UST system.

What is inventory control?

Regardless of your chosen release-detection method, all retail facilities (where fuel products are sold to the public) are required to perform inventory control. In addition, all tanks should be checked for water at least once a month. Inventory control is an ongoing accounting system similar to balancing a checkbook. Inventory control compares what is in the tank to what should be in the tank, to reconcile the inputs and outputs of product with the volume remaining in the UST. Each day the tank is used, records of product deliveries, amounts dispensed, and the measured volume of fuel remaining in the tank (inventory) are recorded on a ledger-like form. (Although this form is available in paper format for the manual recording of values, it can also be converted to an electronic spreadsheet for tank owners and operators who wish to have values tracked and calculated by computer.) The fuel inventory is determined by measuring fuel level in the tank with a measuring stick ("sticking the tank") and then converting that level into a volume using a dedicated calibration chart for the tank. Many automatic tank gauges are also capable of determining the fuel level. Doing proper inventory control on manifolded tanks and blended-fuel systems can be very complicated. This information is very general. For assistance, please call the SBLGA hotline at 800-447-2827.

If your system has tanks that share a common inventory of fuel, those tanks are considered to be *manifolded*. For example, two 1,000-gallon tanks that are connected are considered manifolded tanks. For the purpose of inventory control, you should consider all manifolded tanks as a single system.

Blended-fuel systems are those with no separate tank for a midgrade product. For example, a station sells three grades of gasoline, but only has two tanks. Fuel from each tank is blended to create the midgrade fuel. To complete proper inventory control, the blended fuel product must be accounted for in both of the tanks' inventory-control records.

At the end of the month, the book inventory and the measured inventory are compared to determine that month's overage or shortage of product, which is then compared to a threshold value obtained from a mathematical formula. If the overage or shortage exceeds the threshold value for two consecutive months, you

must report a suspected release. (See *Suspected Releases from Petroleum Storage Tanks*, TCEQ publication RG-475h, for more information about reporting suspected releases.)

A monthly water check is also required to quantify the water in the tank. A small amount may be expected, but it is critical to remove water from the tank before it interferes with dispensing operations. Also, a sudden influx of water into the tank may need to be reported to the TCEQ as a suspected release.

For more details and sample forms regarding inventory control, see the U.S. Environmental Protection Agency's publication no. 510-B-93-004, *Doing Inventory Control Right*.

Is inventory control an acceptable method of monthly release detection?

Inventory control is only effective for finding larger leaks and is not considered a stand-alone method of release detection; it must be used in combination with a monthly method that is capable of detecting small leaks.

What are my options for detecting releases from *tanks*?

In Texas, tanks are required to be monitored for leaks at least once a month.

When properly employed, the following are acceptable methods of monthly release detection.

Automatic tank gauging (ATG) and inventory control use monitors permanently installed in the tank and linked electronically to a nearby control device to report product level and temperature. Often called the "tank monitor," the control device is usually mounted on a wall inside a building and has a keypad and message screen, and a printing device. During a test period, the gauging system automatically calculates the changes in product volume that can indicate a leaking tank. The test will often fail or give an inconclusive result if the product level in the tank is too low or if product is added to or removed from the tank while the test is being run. Test periods require several hours of quiet time, when nothing is put into or taken from the tank. Users of the ATG system must perform a complete test on each tank at least once a month.

In addition to the automatic test, inventory control for each tank must be maintained as outlined in the previous section. Some ATG systems can perform inventory control and store the results in memory or print a copy. If you do not have this type of ATG, inventory-control data must be obtained manually, as outlined above. ATG monitors tanks only; a separate method of release detection is required for the piping system.

Statistical inventory reconciliation (SIR) and inventory control make use of a computer program to determine whether a tank system is leaking by conducting a statistical analysis of inventory, delivery, and dispensing data collected over time. The data are sent by the tank owner or operator to a SIR

vendor, who analyzes the data to determine if there is a loss trend in the UST system.

By the 15th of each month, the SIR vendor supplies to the client (the tank owner-operator) a report that indicates whether the UST system is leaking.

If the analysis indicates a failure (or an inconclusive result that cannot be immediately corrected), the situation is considered a **suspected release** and must be reported to the TCEQ within 24 hours from the time the operator receives the results. ***Important*: even a single SIR failure requires notification and investigation of a suspected release, even if inventory control indicates there is not a leak in the tanks.** In Texas, SIR is considered a monthly monitoring method of release detection which covers tanks and lines.

Interstitial monitoring is used in double-walled UST systems. Monitoring equipment designed to detect product vapors or liquid is placed in the interstitial space between the inner (primary) and outer (secondary) wall of the system. The probes must monitor the interstitial space at least once every month.

In ***groundwater monitoring***, monitoring wells are installed at strategic locations in the ground near the tank system. Groundwater is monitored for the presence of liquid product (gasoline, diesel, used oil) floating on its surface. To discover if leaked product has reached groundwater, these wells are checked periodically (at least once every month) by hand or continuously with permanently installed equipment (electronic sensors). This method is only valid at sites where groundwater is within 20 feet of the surface year round and the subsurface soil or backfill material (or both) consists of gravels, coarse to medium sands, or other similarly permeable materials. The person who installs the wells should state in writing that a release from any part of the UST system will be detected within one month of its occurrence.

Vapor monitoring is the sensing and measurement of product vapor in the soil around the tank system to determine whether a leak is present. This method requires installation of carefully placed monitoring wells in the ground near the tank system. Vapor monitoring can be periodic (at least once every month) using manual devices or continuously using permanently installed equipment (electronic sensors). All subsurface soils and backfill material must be sufficiently porous, e.g., gravel, sand) to allow vapors to diffuse rapidly through the subsurface. For this method of release detection to be acceptable, any preexisting background contamination in the subsurface soils must not interfere with the ability of the vapor-monitoring equipment to detect a new release. The person who installs the wells should state in writing that a release from any part of the UST system will be detected within one month of its occurrence.

Note: For both groundwater monitoring and vapor monitoring, the owner or operator is required to ensure subsurface conditions that enable the monitoring systems to detect a release from any portion of the system that contains product.

Secondary containment barriers are impermeable barriers (i.e., liners, vaults) placed between the UST system and the environment. Leaked product from the UST system is directed toward monitoring points such as observation wells

located between the tank system and the secondary containment barrier. To determine if a leak has occurred, the wells should be checked periodically (at least once every month) by hand or continuously with permanently installed equipment (electronic sensors).

Manual tank gauging is only acceptable for tanks with a capacity of 1,000 gallons or less. It requires a quiet period each week. The length of the quiet period depends on the diameter of the tank. For that reason, very few owners or operators use this method of release detection. If you would like more information on it, contact the TCEQ (see the end of this guide).

Monthly tank gauging is only acceptable for emergency-generator tanks. It requires a monthly quiet period, during which nothing is added to or removed from the tank. The product level is measured at the beginning and end of the quiet period. The difference between measurements should be within certain standards based on the capacity of your tank. If you would like more information on this method, contact the TCEQ, using the information at the end of this guide.

What are my options for detecting releases from *product piping*?

Pressurized piping. Each pressurized product line (from the USTs to the fuel dispenser) is required to have an automatic line-leak detector (ALLD) designed to detect and prevent a large or catastrophic leak (of at least 3 gallons per hour) in the line. Mechanical ALLDs are required to be performance tested annually. If you have an electronic ALLD (also referred to as an *ELLD*) that can self-test **and** either print out or store the test results, documentation of the self-test at least once a year satisfies your ALLD-testing requirements. Contact your UST-system contractor for more information about ALLD testing.

In addition to an automatic line-leak detector, pressurized piping requires one of the following release-detection methods:

- an annual piping-tightness test
- monthly vapor monitoring
- monthly groundwater monitoring
- monthly interstitial monitoring
- monthly monitoring with a secondary containment barrier
- monthly SIR and inventory control
- monthly electronic leak monitoring

Suction piping requires no leak detection if it meets **all of** the following design requirements:

- The below-grade piping operates at less than atmospheric pressure.
- The below-grade piping is sloped so that the contents of the pipe drain back into the tank when suction is released.

- Only one check valve is included for each suction line and it is located directly below, and as close as possible to, the suction pump.
- The owner-operator is able to verify that these requirements have been met, e.g., via plans provided by the installer, a consultant, or signed documentation by a registered UST contractor.

If your suction piping meets these requirements and you choose not to equip your piping with leak detection, you must have proper documentation.

Suction piping that does not meet these design requirements listed above must use one of the following approved methods to meet the release-detection requirements for piping:

- a piping-tightness test once every three years
- monthly vapor monitoring
- monthly groundwater monitoring
- monthly interstitial monitoring
- monthly monitoring with a secondary containment barrier
- monthly SIR and inventory control

What records do I need to keep?

All testing and monitoring results, including the results of any annual function test of mechanical ALLDs, must be kept for at least five years. Also, certification of financial assurance must be maintained at the facility, in addition to the UST registration certificate and TCEQ fuel-delivery certificate. All equipment used for release detection must have a third-party certification which verifies that the equipment meets EPA standards. Each certification must list the conditions of use and limitations of the equipment. Copies of these certifications must be maintained by the owner-operator while the equipment is in use, and it is important to ensure that the equipment is operated in accordance with the third-party certification. Installation and maintenance records for the UST system must be maintained by the owner operator for the life of the system, and should **not** be discarded after five years. Supplemental record-keeping forms have been attached to the end of this document.

What if there is a release?

If any of the release detection methods above indicate that a leak has occurred, the owner or operator is required to report it within 24 hours as a suspected release to the agency at 512-239-2200 or 800-832-8224. For more information on what to do in the case of suspected releases, please refer to the module *Suspected Releases from Petroleum Storage Tanks* (RG-475h).

Where do I find more information?

The complete requirements for release detection may be found at 30 TAC 334.50, available online at <info.sos.state.tx.us/pls/pub/readtac$ext.ViewTAC?tac_view=4&ti=30&pt=1&ch=334>.

The Small Business and Local Government Assistance Program has information designed to assist tank owners and operators online at <www.tceq.texas.gov/goto/pst_resources>.

Search TCEQ publications online at <www.tceq.texas.gov/goto/publications>.

EPA Office of Underground Storage Tanks home page (please note that EPA requirements may be used as a guideline, but differ from Texas requirements): <www.epa.gov/oust/pubs>.

Suspected Releases from Petroleum Storage Tanks (RG-475h), available online at <www.tceq.texas.gov/goto/rg-475>.

For confidential environmental compliance assistance for small businesses and local governments, contact Small Business and Local Government Assistance via its hotline at 800-447-2827 or online at <www.TexasEnviroHelp.org>.

Monthly Record of Vapor-Well Monitoring

If you have questions on how to complete this form or about the Petroleum Storage Tank (PST) program, please contact the Small Business and Local Government Assistance hotline at 1-800-447-2827, or online at <www.TexasEnviroHelp.org>.

Facility Information

Facility Name:	**Facility ID No.:**
Street Address:	**City, State, Zip:**

Instructions

- Vapor wells must be monitored at least monthly for potential product releases.
- Monitoring and observation wells must be properly secured to prevent any unauthorized substances being deposited in the well.
- If there is a suspected release, notify the TCEQ within 24 hours and refer to module RG-475h, *Suspected Releases from Petroleum Storage Tanks.*
- Keep this form on file for at least five years.

Vapor Reading Instrument and Tank Information

Instrument Name and Type:	
Date Last Calibrated:	**Depth from Ground Surface to Tank Bottom (in feet):**

Vapor Monitoring Well Record

Date Inspected	**Vapor Reading (in PPM)**						**Free Product in Well (Y/N)**	**Inspector Initials**	**Comments**
	Well No. 1	**Well No. 2**	**Well No. 3**	**Well No. 4**	**Well No. 5**	**Well No. 6**			

Monthly Record of Groundwater-Well Monitoring

If you have questions on how to complete this form or about the Petroleum Storage Tank (PST) program, please contact the Small Business and Local Government Assistance hotline at 1-800-447-2827, or online at <www.TexasEnviroHelp.org>.

Facility Information

Facility Name:	**Facility ID No.:**
Street Address:	**City, State, Zip:**

Instructions

- Groundwater wells must be monitored at least monthly for potential product releases.
- Monitoring wells must be properly secured to prevent any unauthorized substances being deposited in the well.
- Automatic monitoring devices must be capable of detecting at least 1/8 inch of free product on top of the groundwater.
- Manual monitoring method must be capable of detecting a visible sheen or other accumulation of regulated substances.
- If there is a suspected release, notify the TCEQ within 24 hours and refer to module RG-475h, *Suspected Releases from Petroleum Storage Tanks.*
- Keep this form on file for at least five years.

Groundwater

Depth from Ground Surface (in feet):	**Depth to Tank Bottom (in feet):**

Groundwater-Monitoring Well

Date Inspected	**Depth to Top of the Groundwater (in feet)**						**Free Product in Well (Y/N)**	**Inspector Initials**	**Comments**
	Well No. 1	**Well No. 2**	**Well No. 3**	**Well No. 4**	**Well No. 5**	**Well No. 6**			

Monthly Record of Interstitial-Sensor Monitoring

If you have questions on how to complete this form or about the Petroleum Storage Tank (PST) program, please contact the Small Business and Local Government Assistance hotline at 1-800-447-2827, or online at <www.TexasEnviroHelp.org>.

Facility Information

Facility Name:	**Facility ID No.:**
Street Address:	**City, State, Zip:**

Instructions

- Interstitial sensors must be monitored at least monthly for potential product releases.
- If there is a suspected release, notify the TCEQ within 24 hours and refer to module RG-475h, *Suspected Releases from Petroleum Storage Tanks.*
- Keep this form on file for at least five years.

Sensor Location (tank or dispenser [T/D])

Sensor 1	Sensor 2	Sensor 3	Sensor 4	Sensor 5	Sensor 6	Sensor 5	Sensor 6	Sensor 7	Sensor 8

Sensor -Status Record

Date Inspected	Sensor Status								Inspector Initials	Comments
	Sensor 1	Sensor 2	Sensor 3	Sensor 4	Sensor 5	Sensor 6	Sensor 7	Sensor 8		

Monthly Record of Secondary Containment Well Monitoring

If you have questions on how to complete this form or about the Petroleum Storage Tank (PST) program, please contact the Small Business and Local Government Assistance hotline at 1-800-447-2827, or online at <www.TexasEnviroHelp.org>.

Facility Information

Facility Name:	**Facility ID No.:**
Street Address:	**City, State, Zip:**

Instructions

- Observation wells must be monitored at least monthly for potential product releases.
- *Note:* if your system uses observation wells or electronic sensors to determine if there is free product in the secondary containment, record if free product detected.
- Observation wells must be properly secured to prevent any unauthorized substances being deposited in the well.
- If there is a suspected release, notify the TCEQ within 24 hours and refer to module RG-475h, *Suspected Releases from Petroleum Storage Tanks.*
- Keep this form on file for at least five years.

Monitoring Method

Secondary-Containment Release-Detection Method (circle one):	
Observation Wells	**Electronic Sensors**

Observation Well or Sensor-Status Record

Date Inspected	**Sensor-Status or Well Observation (Free product detected? Y/N)**						**Inspector Initials**	**Comments**
	Sensor/ Well No. 1	**Sensor/ Well No. 2**	**Sensor/ Well No. 3**	**Sensor/ Well No. 4**	**Sensor/ Well No. 5**	**Sensor/ Well No. 6**		

Weekly Record of Manual Tank Gauging (Tanks <1,000 gallons)

If you have questions on how to complete this form or about the Petroleum Storage Tank (PST) program, contact the Small Business and Local Government Assistance hotline at 1-800-447-2827, or online at <www.TexasEnviroHelp.org>.

Facility Information

Facility Name:	**Facility ID No.:**
Street Address:	**City, State, Zip:**

Instructions

- Manual tank gauging must be performed weekly.
- In the table to the side, circle your tank size, duration, and standard.
- If the weekly or monthly average of the four weekly test results exceed the standard in the table your tank may be leaking.
- If there is a suspected release notify TCEQ within 24 hours and refer to module RG-475h, *Suspected Releases from Petroleum Storage Tanks*.
- If you don't have sufficient quiet time, you must choose a different method of release detection.
- Release detection is a good business practice. Lost product, penalties and fines, and cleanup costs can add up to a significant amount of money.

Tank Size	Minimum Duration of the Test	Weekly Standard (1 test)	Monthly Standard (4-test average)
Up to 500 Gallons	36 hours	10 gallons	5 gallons
551–1000 gallons (when tank diameter is 64″)	44 hours	9 gallons	4 gallons
551–1000 gallons (when tank diameter is 48″)	58 hours	12 gallons	6 gallons
551–1000 gallons (also requires periodic tank tightness testing)	36 hours	13 gallons	7 gallons

Gauge Record

Start Test (date and time)					
First Initial Stick Reading					
Second Initial Stick Reading					
Average Initial Reading					
Initial Gallons (convert inches to gallons) [a]					
End Test (date and time)					**To calculate monthly average, divide sum of 4 weekly readings by 4 and enter results here ▼**
First End Stick Reading					
Second End Stick Reading					
Average End Reading					
End Gallons (convert inches to gallons) [b]					
Change in Tank Volume (gallons + or –) [a – b]					
Initials					
Tank Passes Test? Y/N					

TCEQ REGULATORY GUIDANCE
Small Business and Environmental Assistance Division
RG-475h ● August 2009

Suspected Releases from Petroleum Storage Tanks

A guide for owners and operators of underground storage tanks

This is a general guide to laws and regulations about underground storage tanks and an aid in minimizing potential risks; it does not replace those laws and regulations, which take precedence over any information contained herein. If your tank system is located in Kinney, Uvalde, Medina, Bexar, Comal, Hays, Travis, or Williamson County, additional requirements related to the protection of the Edwards or the Trinity Aquifer may apply (Title 30, Texas Administrative Code [30 TAC], Chapters 213 and 214). Besides the TCEQ, local governments and other state and federal agencies may have rules that apply. The owner and operator are responsible for ensuring compliance with all applicable regulations.

What is a suspected release?

A release may be suspected when there is an indication that a leak, spill, or overfill of fuel or another regulated substance may have occurred. A suspected release may be indicated if:

- Monitoring results from a release detection method required under 30 TAC 334.50 indicate that a release may have occurred. (*Note:* Inventory control reporting is not required if a second month's data do not confirm the initial result).
- There is direct visual or olfactory observation of released product in the environment (for example, sheen on surface water, or product vapors in a utility conduit), but the product source is unknown.
- Unusual operating conditions (for example, erratic dispenser behavior, sudden loss of product, or appearance of tank water) indicate that a release may have occurred.
- The interstitial monitor indicates a breach in the primary wall or secondary barrier.
- Statistical inventory reconciliation (SIR) and inventory control is the release detection method, and the owner-operator receives a "fail" from the SIR vendor (this finding must be reported to the TCEQ within 24 hours), or results are "inconclusive" and cannot be quantified as "pass" (this finding must be reported within 72 hours).
- A spill bucket or sump appears to be leaking.
- Any spill or overfill from a UST or aboveground storage tank (AST) system exceeds 25 gallons or causes a sheen on nearby surface water.

- Any spill or overfill of a hazardous substance from a UST equals or exceeds its reportable quantity under CERCLA (Title 40, Code of Federal Regulations, Part 302).
- A cleanup of a spill or overfill from a UST or AST that is less than 25 gallons cannot be accomplished within 24 hours. In that instance, owners and operators must immediately notify the agency.

What immediate action should I take in the event of a release?

Unless the agency directs otherwise, owners and operators must do the following if a release is confirmed:

1. Stop the release and attempt to prevent further movement into the environment.
2. Monitor and mitigate any fire or safety hazards posed by vapors or product.
3. Take the leaking system out of service until it can be repaired.
4. Remove leaked product (if present) to the extent practicable.
5. Report the release to the agency within 24 hours.

In the event of a release it may be necessary to immediately shut down all or part of the system to avoid further release or other impact. If the release presents a safety or fire hazard (for example, product or vapors are found in drinking-water wells, utility lines, buildings, or storm sewers), both local response agencies and TCEQ emergency-response personnel should be immediately contacted to mitigate the situation. Surface spills should be isolated and contained from access to the public until they are cleaned up to the extent that they pose no immediate threat of fire or explosion.

What actions should I take if I suspect a release?

If leak-detection equipment or processes indicate a potential problem, then they should be evaluated to determine if they are defective and, if so, they should be repaired or corrected. If not, then the tightness of tanks and piping should be tested. If the tanks and lines do not test tight, then find the problem, repair or replace equipment, and conduct a site check by collecting environmental samples. Please note that, even if leak-detection equipment or processes are determined to be defective or if tanks and lines test tight, if environmental contamination is present then a site check involving the collection of environmental samples is required.

If environmental impact is evident at a facility, but the source is unknown, then conduct system tightness tests and proceed through the evaluation as described above.

Results of investigative procedures should be reported to the agency on form TCEQ-00621 (revised March 16, 2009), Release Determination Report Form,

available online at: <www.tceq.state.tx.us/assets/public/remediation/rpr/documents/0621.pdf>.

Where should I report a suspected release?

All suspected or confirmed releases should be reported to the TCEQ Remediation Division at 512-239-2200 or to the Emergency Response hot line at 800-255-3924. Additionally, if a spill presents an imminent danger of fire, explosion, or toxic vapors, the local fire department and any other designated city officials and response personnel should be immediately notified (for example, a spill into a storm sewer could result in an explosion). In addition, tank owners or operators using insurance as their financial-assurance choice should notify their insurance company of the suspected release. Insurance policies have a time limit to report releases; failure to meet these limits may be grounds for your insurance company to deny payment later.

What happens after I report a suspected release?

A tightness test of the UST system must be performed within 30 days of the suspected release, unless another procedure or schedule is approved or required by the agency. Please note that if a tightness test is being conducted as a part of an installation, repair, or removal of a regulated UST, a licensed, on-site supervisor is required to perform the test. If testing indicates that a release has not occurred at the site, the owner or operator must submit a report to the agency containing a detailed description of the investigative procedures that were followed. This report must be submitted within 45 days after the first observation of the suspected release or within another schedule that has been approved or required by the agency. It must include the results of all tests or monitoring performed and a statement that is signed by the owner or operator certifying that the requirements of the investigative procedure have been met. If testing indicates that a leak has occurred, owners and operators must repair or replace any portions of the system that are found to be leaking and begin further investigation and corrective action.

What records do I need to keep?

You should keep results of all release detection records for at least five years. Also, you should keep all information which documents reporting and investigating suspected releases, including all system tests performed.

Who can conduct major system repairs and assess impacts at my site?

Only personnel who are registered or licensed by the State of Texas can perform such activities. Licensed UST on-site supervisors can perform actions to stop tank or piping leaks or ruptures. Once a release is confirmed, a leaking petroleum storage tank corrective action project manager (CAPM) employed

by a company that is a registered corrective action specialist (RCAS) should be retained to evaluate the extent of the spill, oversee site cleanup of surface and subsurface contamination, and instigate the necessary steps to ensure site closure. An informational link and instructions on how to find UST contractors, RCASs, and CAPMs appear below.

Where do I find more information?

The complete requirements for release reporting and corrective action may be found at 30 TAC 334.71–85.

To find UST contractors, RCASs, and CAPMs within your area, first visit <www5.tceq.state.tx.us/oce/olwe/>. Scroll down to "Group Search Criteria." Next, select a "Program." To find CAPMs and RCASs, choose "Leaking Petroleum Storage Tanks Licensing (LPSTOL)" under the "Program" menu and then select one or more of your city, county, ZIP code, or other locality and click "Find." You will see a listing of those licensed personnel within your locale. You can then click on names of individuals or businesses to receive specific information on their types of licensing and how to contact them, and whether the work that they perform is applicable to your site. Please note that all licenses or registrations must be listed as "current," meaning that the holder has met continuing education requirements and is in good standing.

If you are looking for tank installation, removal, or repair services, choose "Underground Storage Tank Licensing (USTOL)" from the "Program" menu and then specify your site location as described above.

Search for publications on the TCEQ Web site at: <www.tceq.state.tx.us/publications>.

For confidential environmental compliance assistance for small businesses and local governments, contact Small Business and Local Government Assistance via the hot line at 800-447-2827 or online at <www.sblga.info>.

TCEQ REGULATORY GUIDANCE
Small Business and Environmental Assistance Division
RG-475i ● August 2009

Financial Assurance for Petroleum Storage Tanks

A guide for owners and operators of underground storage tanks

This is a general guide to laws and regulations about underground and aboveground storage tanks and an aid in minimizing potential risks; it does not replace those laws and regulations, which take precedence over any information contained herein. If your tank system is located in Kinney, Uvalde, Medina, Bexar, Comal, Hays, Travis, or Williamson County, additional requirements related to the protection of the Edwards or the Trinity Aquifer may apply (Title 30, Texas Administrative Code [30 TAC], Chapters 213 and 214). In addition to the laws and TCEQ rules, local governments and other state and federal agencies may have rules that apply. The owner and operator are responsible for ensuring compliance with all applicable laws and regulations.

What is financial assurance?

Financial assurance is the ability to pay for a cleanup of a leak or release from the UST system. It is also known as *financial responsibility* and should be an approved mechanism, such as insurance.

Under 30 TAC Chapter 37, Subchapter I, owners or operators of USTs must demonstrate financial assurance for **corrective action** and **third-party liability**.

Financial assurance for **corrective action** covers the cost of action to correct the results of an accidental release arising from the operation of a UST.

Financial assurance for **third-party liability** compensates third parties for bodily injury and property damaged caused by accidental releases arising from the operation of a UST.

The owner or operator of the UST must demonstrate financial assurance. Only one person is required to demonstrate financial assurance; however, both owner and operator are liable in the event of noncompliance.

Why do I need it?

It is particularly important that someone be prepared to pay for cleanup so that it can begin as quickly as possible. Without fast action at a site, contamination can spread and significantly increase the chance of damage to the environment and human health.

Complying with the financial responsibility requirements also protects **you** as an owner or operator of USTs. If your UST leaks, you may be faced with expensive cleanup costs and with lawsuits brought by third parties.

Evidence of financial assurance must accompany all self-certification forms. The TCEQ will not issue delivery certificates until it has verified acceptable financial assurance. In addition, failure to produce evidence of financial assurance when requested by an inspector or other TCEQ employee could result in violations, fines, or shutdown.

What are my options?

Owners and operators may choose from any of the options listed for financial assurance:

- **insurance**—obtained from an insurance agent
- **financial test**—self-insurance used by only the largest companies
- **corporate guaranty**—self-insurance provided by a parent company of the owner or operator*
- **surety bond**—obtained from an insurance agent*
- **letter of credit**—obtained from a financial institution such as a bank*
- **trust**—set up with a financial institution such as a bank
- **local-government financial test**—self-insurance for local governments

Regardless of the option you choose, you must have a mechanism worded exactly as required by 30 TAC, Chapter 37, Subchapter I. Mechanisms worded per federal regulations in Title 40, Code of Federal Regulations, Chapter 280 are not acceptable, with the exception of the local government financial test which should be worded in accordance with that chapter.

Tank Insurance

Insurance is the most common choice among owners or operators. General liability policies do not cover pollution events and don't meet regulatory requirements. In the industry, the required insurance is sometimes known as *pollution liability for underground storage tanks*. Most major insurance companies will supply the certificate of insurance required by 30 TAC 37 as evidence of coverage within the policy. Make sure the information on the certificate regarding the tank owner or operator and the number and location of tanks exactly matches the information reflected on your registration forms.

Rules also allow an endorsement worded in accordance with 30 TAC 37 in lieu of a certificate of insurance, but such endorsements are not used by insurance companies. Certificates from the Association for Cooperative Operations

* In addition, this mechanism requires that a separate unfunded, standby trust be established.

Research and Development (ACORD) are included with policies but are not acceptable proof of coverage.

How much coverage is needed?

Financial assurance has both **per occurrence** and **annual aggregate** requirements for minimum coverage.

- **Per occurrence** refers to the amount of funds that must be available to pay the costs from each occurrence of a leaking UST.
- **Annual aggregate** is the total amount of funds available for all accidental leaks that might occur in one year.

The amount of financial responsibility coverage you need is determined by the type of business you operate, the amount of throughput of your tanks, and the number of tanks you own. If you have one or more tanks at a petroleum marketing (retail) facility, you must have the following coverage.

- If you own 100 tanks or **fewer**, you must demonstrate that you have coverage of $1 million per occurrence and $1 million annual aggregate.
- If you own **more** than 100 tanks, you must demonstrate that you have coverage of $1 million per occurrence and $2 million annual aggregate.

If your tanks are not located at a petroleum production, refining, or marketing facility and you have a monthly throughput of 10,000 gallons or less for all tanks, you need $500,000 per occurrence. If your facility has more than a monthly throughput of 10,000 gallons you must have at least $1 million per occurrence. The required per-occurrence and annual-aggregate coverage amounts do not in any way limit the liability of the owner or operator. Tank owners may find that increased coverage limits are not much more expensive.

How long do I need to keep financial assurance?

You must maintain financial assurance until the tanks are properly removed from service or, if corrective action is required, until the action is completed. If you no longer have financial assurance, any remaining product must be removed from tanks within 90 days after financial assurance terminates unless the owner or operator renews the financial-assurance mechanism.

The TCEQ recommends that financial assurance be maintained until all sampling results confirm that no release has occurred.

Filing an Insurance Claim

Tank owners or operators should be aware of their insurance policy's requirements for filing a successful insurance claim. Pay particular attention to the following:

- **Technical compliance** with tank regulations, including proper use of release-detection methods, may affect your ability to make a successful claim.
- **Prompt reporting** of suspected or confirmed releases and filing a claim within a specific time period may be required. Suspected or confirmed releases must be reported to the TCEQ within 24 hours of their occurrence. This is also a good time to notify your insurance company of the suspected or confirmed release.
- **Sale or transfer** of a business or property does not transfer policy coverage to a new tank owner. New coverage must be obtained.
- **Pre-existing contamination** may pose issues for coverage for cleanup; be sure to investigate property conditions.

What records do I need to keep?

An owner or operator must maintain a financial assurance mechanism worded exactly as required by 30 TAC 37, Subchapter I, for the mechanism type selected. Proof of financial assurance should be kept at the UST site or at the owner or operator's place of business and must be supplied to the TCEQ upon request. Records maintained off-site must be made available in a timely manner. Keep the records until your UST site is properly closed.

- When using a financial test (including a local-government financial test) or a guarantee, you must maintain a copy of the chief financial officer's letter based on year-end financial statements for the most recent completed financial-reporting year. This documentation must be redone each year within 120 days after the close of the financial reporting year.
- An owner or operator using a guarantee, surety bond, or letter of credit must maintain a copy of the signed standby-trust-fund agreement and copies of any amendments to the agreement.

Where do I find more information?

The complete requirements for financial assurance may be found in 30 TAC 37, Subchapter I.

For questions concerning financial assurance, please contact the Financial Assurance Section at 512-239-0300.

For confidential environmental compliance assistance for small businesses and local governments, contact Small Business and Local Government Assistance via the hot line at 800-447-2827 or online at <www.sblga.info>.

Gasoline Stage I and II Vapor Recovery

A guide for owners and operators of underground storage tanks

This is a general guide to laws and regulations about underground and aboveground storage tanks and an aid in minimizing potential risks; it does not replace those laws and regulations, which take precedence over any information contained herein. If your tank system is located in Kinney, Uvalde, Medina, Bexar, Comal, Hays, Travis, or Williamson County, additional requirements related to the protection of the Edwards or the Trinity Aquifer may apply (Title 30, Texas Administrative Code [30 TAC], Chapters 213 and 214). In addition to the laws and TCEQ rules, local governments and other state and federal agencies may have rules that apply. The owner and operator are responsible for ensuring compliance with all applicable laws and regulations.

What is Stage I and II vapor recovery?

The federal Clean Air Act includes special rules for areas that do not meet the national ambient air quality standards. The Act requires each state to develop and execute a State Implementation Plan. These SIPs include measures to deal with pollution. Stage I and Stage II are two control strategies helping Texas achieve its goals for air quality.

Stage I vapor recovery captures vapors released when gasoline is delivered to a storage tank. The vapors are returned to the tank truck as the storage tank is being filled with fuel, rather than released to the ambient air.

Stage II captures gasoline vapors when a vehicle is being fueled at a dispenser. The vapors are returned through the dispenser hose to the petroleum storage tank instead of being released into the air. On some vehicles, Stage II vapor recovery systems help capture up to 95 percent of harmful gasoline vapors that might otherwise be released to the atmosphere. See Figure 1.

What is the purpose of vapor recovery?

Stage I equipment decreases the amount of gasoline vapors released into the atmosphere during refilling. Stage II equipment captures gasoline vapors during vehicle refueling and sends them back to the UST. Gasoline

is a complex mixture of hundreds of chemical compounds. Repeated or prolonged exposure to some of those compounds could pose a health risk to humans. In addition, some elements of gasoline vapors called volatile organic compounds contribute to the formation of ground-level ozone. Ozone is the primary component of smog.

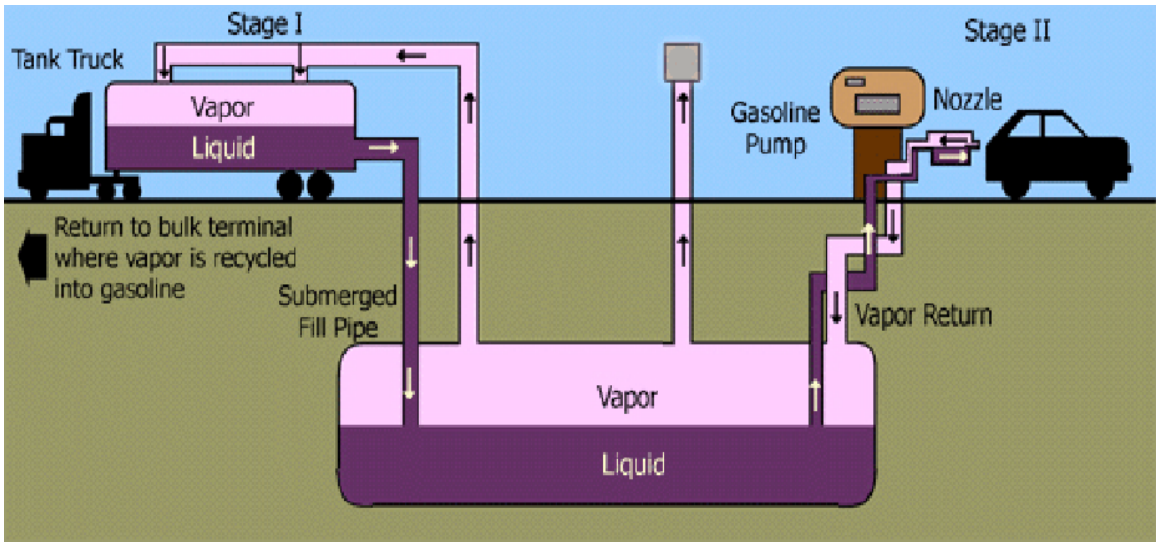

Figure 1. Stage I and II vapor recovery.

Am I required to have Stage I and II?

Use the flowchart in Figure 2, along with the list of counties in Table 1, to determine whether your facilities are required to have Stage I or II vapor-recovery equipment. You should be able to find your monthly throughput listed on your inventory-control sheet as "monthly gallons pumped."

In addition to current rules, all gasoline-dispensing facilities with a monthly throughput of more than 100,000 gallons are required to be equipped with Stage I equipment by January 10, 2011, regardless of location.

What are the requirements for Stage I systems?

For Stage I vapor-recovery systems, your facility must be equipped with pressure or vacuum relief valves on the storage-tank vent lines, two-point connections for vapor recovery during fuel delivery, and drop tubes that extend to within 6 inches of the tank bottom. All Stage I equipment must be certified by the California Air Resources Board (CARB) or an approved third party.

Additionally, by January 10, 2011, all gasoline-dispensing facilities with a monthly throughput of more than 10,000 gallons must have a drop tube

that extends to within 12 inches of the tank bottom if the pipes were installed on or before November 9, 2006, or within 6 inches of the tank bottom if the pipes were installed after November 9, 2006, regardless of county. A list of approved Stage I equipment can be found at the TCEQ's Web site. A link appears at the end of this guide.

Additional requirements may apply depending on your throughput and location. Please refer to EPA publication EI 43-02, *Summary of Regulations Controlling Air Emissions,* for more information.

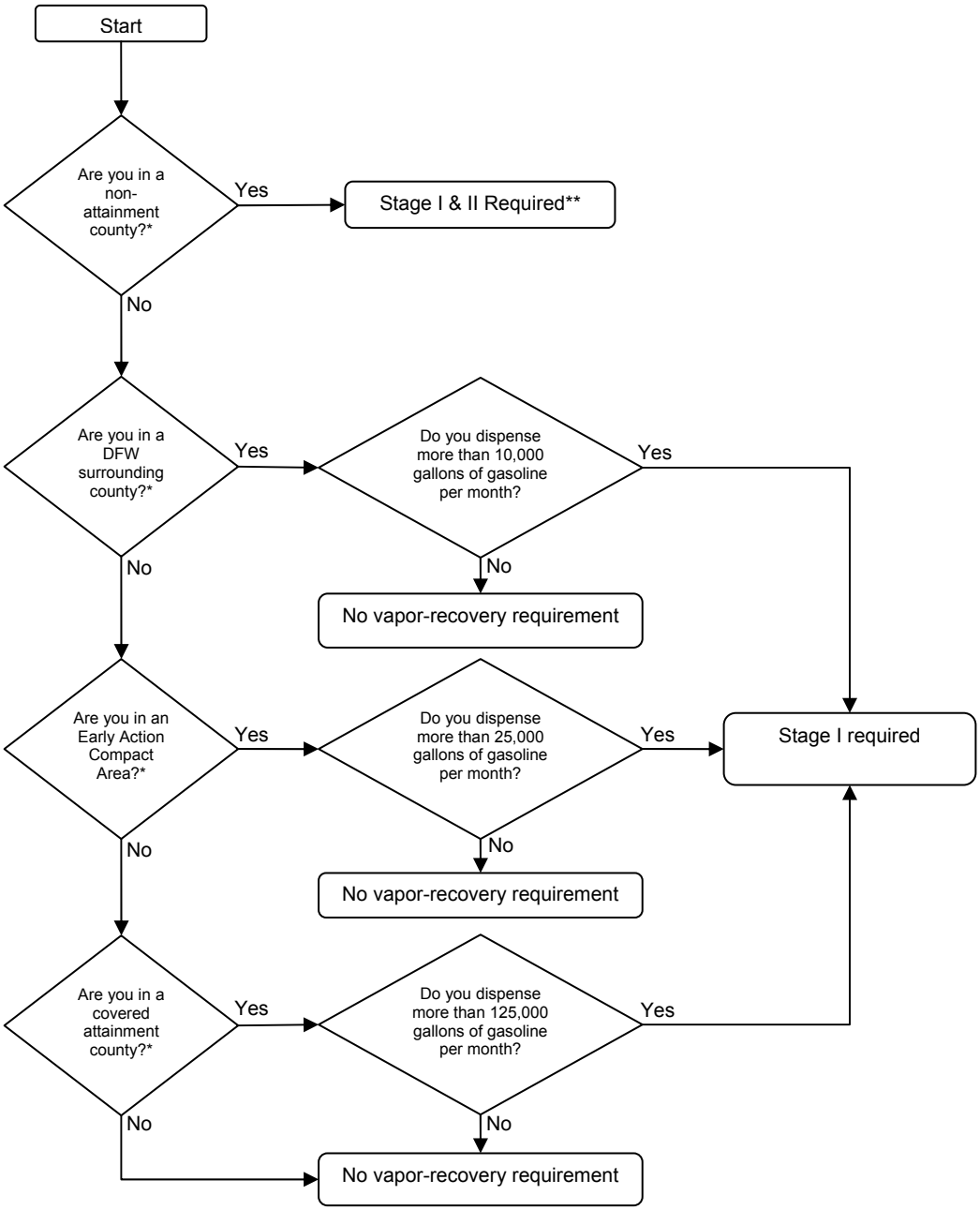

* See Table 1.

******Your facility may be exempt from Stage II recovery requirements if you continue to meet one or both of the following conditions:

1. Your facility has never dispensed gasoline into the fuel tanks of motor vehicles on and after your prescribed Stage II compliance date.

2. Original construction of gasoline-dispensing equipment began before November 15, 1992 **and** the facility never dispensed an average of 10,000 gallons or more of gasoline per month between January 1, 1991, and November 15, 1992 **and** never dispensed 10,000 gallons or more of gasoline during **any one** calendar month since November 15, 1992, except during documented emergencies or natural disasters.

If you meet one or both of the exemption requirements, you may submit a Stage II Vapor Recovery Exemption Confirmation Form (TCEQ-20532). For more information about Stage II recovery exemptions, links to the TCEQ Web site appear at the end of this document.

Figure 2. Flowchart for determining whether Stage I or II vapor recovery is needed.

Table 1. Counties requiring Stage I and II.

Nonattainment counties	Brazoria, Chambers, Fort Bend, Galveston, Harris, Liberty, Montgomery, Waller, Hardin, Jefferson, Orange, El Paso, Collin, Dallas, Denton, Tarrant
Counties surrounding Dallas–Fort Worth	Ellis, Johnson, Kaufman, Parker, Rockwall
Early Action Compact Areas	Bastrop, Caldwell, Hays, Travis, Williamson, Bexar, Comal, Guadalupe, Wilson
Covered attainment counties	Anderson, Angelina, Aransas, Atascosa, Austin, Bee, Bell, Bosque, Bowie, Brazos, Burleson, Calhoun, Camp, Cass, Cherokee, Colorado, Cooke, Coryell, De Witt, Delta, Falls, Fannin, Fayette, Franklin, Freestone, Goliad, Gonzales, Grayson, Gregg, Grimes, Harrison, Henderson, Hill, Hood, Hopkins, Houston, Hunt, Jackson, Jasper, Karnes, Lamar, Lavaca, Lee, Leon, Limestone, Live Oak, Madison, Marion, Matagorda, McLennan, Milam, Morris, Nacogdoches, Navarro, Newton, Nueces, Panola, Polk, Rains, Red River, Refugio, Robertson, Rusk, Sabine, San Augustine, San Jacinto, San Patricio, Shelby, Smith, Somervell, Titus, Trinity, Tyler, Upshur, Van Zandt, Victoria, Walker, Washington, Wharton, Wise, Wood

What are the requirements for Stage II systems?

All Stage II systems are required to be compatible with onboard-refueling vapor recovery (ORVR). Additionally, all Stage II equipment must be certified by CARB or an approved third party. CARB executive orders delineate system-specific requirements for installation, equipment, and maintenance. Table 2 gives a list of common CARB executive orders. For a more complete list of Stage II ORVR-approved systems and CARB executive orders, follow the TCEQ Web address at the end of this module.

Table 2. Common CARB executive orders.

System	Executive Order
Gilbarco	G-70-150 AE
Dresser-Wayne	G-70-153 AD
Tokheim	G-70-154
Balance	G-70-52 AM

Healy 800	G-70-191 AA
Healy 400 ORVR	G-70-186

What are the Stage II testing requirements?

If your facility is required to have Stage II equipment, the following tests are required once every 12 months, within the same calendar month in which it was completed during the previous year:

- TXP-102 Pressure Decay
- TXP-104 Flow Rate (if applicable)
- TXP-105 Liquid Removal (if applicable)
- TXP-106 Volume-to-Liquid Ratio (vacuum assist)

Additionally, the following tests are required once every 36 months:

- TXP-101 Vapor Space Manifolding
- TXP-103 Dynamic Back-Pressure

You must submit a pre-test notification (form TCEQ-10501) to your TCEQ regional office at least 10 days before you conduct any type of testing on your Stage II equipment. This form can be downloaded at <www.tceq.state.tx.us/forms>. Regional-office mailing addresses appear on page 2 of the form.

All test results, regardless of their outcome, must be submitted to the appropriate regional office within 10 working days after the test is conducted. Attach to the completed Vapor Recovery Test Procedure Cover Sheet (form TCEQ-10502) copies of all result forms from each applicable test. For more information about testing for Stage II vapor recovery testing, please refer to the *Vapor Recovery Test Procedures Handbook* (TCEQ publication no. RG-399).

What are the Stage II inspection requirements?

The owner or operator of a gasoline-dispensing facility equipped with Stage II equipment must inspect for the following defects daily:

- any missing or disconnected equipment
- a crimped or flattened vapor hose
- a torn nozzle boot
- for balance nozzles, a damaged faceplate
- for vacuum-assist systems, a damaged or missing cone

- a nozzle shutoff mechanism that malfunctions in any manner
- a vapor processing or control unit that is inoperative or defective
- a system monitor or printer that is malfunctioning or out of paper
- a gasoline leak in either the dispensing or Stage II equipment.

Monthly, the owner or operator must inspect for inoperative or defective pressure or vacuum relief valves, vapor-check valves, or Stage I dry breaks.

Keep a separate daily and monthly inspection sheet, and document every inspection made. If you discover any defect, you must remove all affected dispensing equipment from service until the defect has been properly repaired, replaced, or adjusted. For more specific information on Stage II inspection requirements, refer to the rules in 30 TAC 115.242.

What are the Stage II training requirements?

If your facility is required to have a Stage II vapor-recovery system, you are required to have at least one worker at that station trained and certified to operate and maintain the system. To obtain this certification for yourself or one of your employees, you must register for a course from a TCEQ-approved training provider.

If you own or operate more than one facility, either you may send at least one employee from each facility to a “representative” course, or you may send one employee to a “trainer” course. An employee who has taken a “trainer” course is allowed to train the employees from other facilities. The TCEQ Web site maintains a list of training providers (see the Web address at the end of this guide).

The certified individual is responsible for making all current and future employees familiar with the purposes and correct operating procedures of your Stage II system. If the facility representative who received the approved training is no longer employed at that facility, another representative must successfully complete approved training within three months of the departure of the previously trained employee.

What records do I need to keep?

For facilities with Stage I equipment, you must keep the following records for at least two years:

- the dates on which gasoline was delivered to your facility and the identification number and date of the last leak testing of each tank-truck tank from which gasoline was transferred to the facility
- the results of any testing conducted at your facility

For facilities with Stage II equipment, you must keep the following records onsite for at least two years:

- a record of any maintenance conducted on any part of the Stage II equipment, including—
  - a general part description
  - the date and time the equipment was taken out of service
  - the date of any repair or replacement
  - information on the manufacturer of any replacement part
  - a general description of the location of any repaired or replacement part in the system (e.g., pump or nozzle number, etc.)
  - a description of the problem
- the results of any additional testing conducted at your facility

Additionally, you must keep the following records on-site indefinitely:

- a copy of the CARB executive order or third-party certification for the Stage II system
- a copy of any owner or operator request for executive-director approval of alternate methods and any ED approval issued
- a record of the results of the daily, monthly, and yearly self-inspections conducted at the fuel-dispensing facility

Furthermore, proof of attendance and completion of training with the documentation of all Stage II training for each employee should be maintained as long as that employee continues to work at the facility.

Where can I find more information?

The complete requirements for Stage I & II may be found in 30 TAC 115, Subchapter C.
<info.sos.state.tx.us/pls/pub/readtac$ext.ViewTAC?tac_view=5&ti=30&pt=1&ch=115&sch=C>

Stage I and II gasoline vapor recovery, list of approved equipment, other information
<www.tceq.state.tx.us/goto/vapor_recovery>

Training for Stage II vapor recovery
<www.tceq.state.tx.us/goto/stage_ii_training>

Vapor Recovery Test Procedures Handbook (RG-399)
<www.tceq.state.tx.us/files/rg-399.pdf_4447468.pdf>

Download TCEQ forms
<www.tceq.state.tx.us/forms>

EPA guide to Stage I (publication no. EI 43-02)
<http://www.epa.gov/ttn/atw/area/gdfb.pdf>

Search agency publications at the TCEQ's Web site
<www.tceq.state.tx.us/publications>

For information about installation or renovation of Stage I or II equipment, please refer to module RG-475c, *Licensed Underground Storage Tank Contractors*.

For confidential environmental compliance assistance for small businesses and local governments, contact Small Business and Local Government Assistance via the hot line at 800-447-2827 or online at <www.sblga.info>.

Who Regulates Petroleum Storage Tanks?

This document was developed to be used as a general guide to the agencies involved with regulating storage-tank systems, whether underground or aboveground. This guide is not necessarily comprehensive, and it is possible that your tanks may be regulated by authorities not listed below. It is the responsibility of the tank owner and operator to ensure compliance with the regulations of all interested governing bodies.

State Agencies Other than the TCEQ

Texas Department of Insurance (State Fire Marshal)

Source of information on rules and regulations affecting underground storage tanks (USTs) and aboveground storage tanks (ASTs) that could pose a threat to public safety due to fire or explosion hazard. The local fire marshal should always be contacted in any type of emergency involving a PST. The State Fire Marshal's Office can supply the name and number of a local fire marshal and answer questions that the local fire marshal cannot.

Phone: 512-305-7900

Toll-free: 800-578-4677

Web site: <www.tdi.state.tx.us/fire/indexfm.html>

Texas Department of Agriculture (Weights and Measures)

The Weights and Measures Program inspects fuel dispensers at service stations to ensure that they meet TDA standards. A TDA sticker should be displayed on all retail dispensers.

Phone: 512-463-7401

Toll-free: 800-835-5832

Web site: <www.agr.state.tx.us>

Texas Department of Public Safety (Commercial Vehicle Enforcement)

Source of information on the requirements pertaining to the transport of hazardous materials (including fuel or empty fuel tanks) on highways.

Phone: 512-424-2116

Web site: <www.txdps.state.tx.us/lw/>

Texas General Land Office (Oil Spill Division)

The GLO has jurisdiction over any AST or UST that could cause spills which could reach coastal waters.

Toll-free: 800-998-4456

Web site: <www.glo.state.tx.us/oilspill/over.html>

Texas Railroad Commission (Oil and Gas Division)

The Railroad Commission regulates tanks associated with the exploration, development, or production of oil, gas, or geothermal resources and exempt from regulation by the TCEQ.

Phone: 512-463-7288

Web site: <www.rrc.state.tx.us/>

Texas State Comptroller of Public Accounts (Fiscal Management Division)

Source of information on the collection by bulk facility operators of the fuel surcharge destined for the Petroleum Storage Tank Remediation Fund.

Toll-free: 800-252-1383

Web site: <https://fmx.cpa.state.tx.us/fm/index.php>

Other TCEQ Regulators

Edwards Aquifer Authority

Regulates USTs and ASTs that could pose a threat to the Edwards Aquifer.

Phone: 210-222-2204

Toll-free: 800-292-1047

Web site: <www.edwardsaquifer.org>

You may be subject to additional TCEQ rules if your UST or AST system is located above or near the Edwards or the Trinity Aquifer. Rules concerning the Edwards Aquifer can be found in Title 30, Texas Administrative Code, Chapter 213; the Trinity Aquifer, Chapter 214. Penalties may be enhanced for those not in compliance with those rules. For more information, contact the TCEQ Austin Region office at 512-239-2929 or the San Antonio Region office at 210-490-3096.

Federal Government

U.S. Department Of Labor (OSHA)

Health and safety requirements pertaining to USTs and ASTs.

Toll-free: 800-321-6742

Web site: <www.osha.gov/>

U.S. Environmental Protection Agency

For more information on the Spill Prevention, Control, and Countermeasure (SPCC) rule, may be found in Title 40, Code of Federal Regulations, Part 112. It gives requirements for oil-spill prevention and preparedness, and response—specifically aimed at preventing discharges of oil into navigable waters and adjoining shorelines. The rule requires specific facilities to prepare, amend, and implement SPCC Plans.

Phone: 214-665-6444

Toll-free: 800-887-6063

Web site: <http://www.epa.gov/region6/6sf/sfsites/oil/introbak.htm>

Local Government

With regard to any UST or AST system, local government officials representing any relevant cities, counties, river authorities, and special districts (such as underground water districts or water control and improvement districts) should always be contacted to determine whether local regulations might be stricter than the state or federal regulations. For

example, some cities have more stringent secondary containment requirements, and others will not allow a tank to be abandoned in place. Additionally, requirements about placement, design, and placarding and certain restrictions relating to fire and explosion hazards apply to ASTs, and are usually controlled by the local fire authority. Contact the local fire authority before the installation of any AST to ensure that their design and placement meet local fire codes.

TCEQ REGULATORY GUIDANCE
Small Business and Environmental Assistance Division
RG-475l ● Revised May 2010

Temporarily Removing Petroleum Storage Tanks from Service

A guide for owners and operators of underground storage tanks

This is a general guide to laws and regulations about underground and aboveground storage tanks and an aid in minimizing potential risks; it does not replace those laws and regulations, which take precedence over any information contained herein. If your tank system is located in Kinney, Uvalde, Medina, Bexar, Comal, Hays, Travis, or Williamson County, additional requirements related to the protection of the Edwards or the Trinity Aquifer may apply (Title 30, Texas Administrative Code [30 TAC], Chapters 213 and 214). In addition to the laws and TCEQ rules, local governments and other state and federal agencies may have rules that apply. The owner and operator are responsible for ensuring compliance with all applicable laws and regulations.

Why would I want to temporarily remove my tanks from service?

The TCEQ requires that you temporarily remove your tanks from service when your UST system is no longer required for its intended purpose. There is always a risk that your tank will release a regulated substance, leading to costly remediation and cleanup fees. To minimize your risk, when your operations temporarily do not require the UST, you should consider emptying it. If you do not plan to use a tank in the future you should budget to permanently remove it from service (see module RG-475m, *Permanently Removing Petroleum Storage Tanks from Service*).

Note: All USTs installed on or before December 22, 1988 should have been upgraded to meet the technical standards for existing UST systems by implementation schedule listed in 30 TAC 334.44. If your tank was installed on or before December 22, 1988 and does not meet the technical standards in 30 TAC 334.47, it must follow the requirements for permanent removal from service (see module RG-475m).

TEXAS COMMISSION ON ENVIRONMENTAL QUALITY • PO BOX 13087 • AUSTIN, TX 78711-3087

What are my options?

If you are considering temporarily removing your UST from service you can either leave the regulated substance in the tank or have the regulated substance removed.

- In accordance with 30 TAC 334.54(d), if you remove the regulated substance from the tank and it is considered "empty" you are not required to maintain release detection or financial assurance (see the definition of *empty* in the next section). However, it is recommended that that you retain an invoice and any written documentation from the company that is removing the regulated substance.

Note: If your financial assurance terminates, you must empty your tanks within 90 days or re-obtain financial assurance.

When is my UST considered empty?

For your UST to be classified as empty, all of the following criteria must be met:

- All regulated substances have been removed as completely as possible by accepted industry procedures.
- Any residue from stored regulated substances which remains in the system does not exceed a depth of 2.5 centimeters and does not exceed 0.3 percent by weight of the system at full capacity.
- The volume or concentration of regulated substances remaining in the system will not pose an unreasonable risk to human health or safety or to the environment.

How do I temporarily remove my UST from service?

When temporarily removing your UST from service, you must maintain the system at a standard that prevents contamination of soil and groundwater.

- File an amended UST registration within 30 days of temporary removal of service using the UST Registration and Self-Certification Form (TCEQ-00724).
- Keep all vent lines open and functioning to prevent vapors building up and potentially causing an explosion.
- Cap, plug, or lock piping, pumps, manways, tank access points and ancillary equipment to prevent access, tampering, or vandalism by unauthorized persons.
- Maintain corrosion protection at all times.

- Unless the UST is emptied of all regulated substances, maintain an approved release detection method and financial assurance.
- If a release of a regulated substance is suspected or confirmed, the owner or operator must comply with all release reporting, investigation, and corrective-action requirements.

How do I return my UST to service?

The following steps must be taken before returning the system to service:

- At least 30 days beforehand, notify the TCEQ regional office using the Aboveground and Underground Storage Tank Construction Notification Form (TCEQ-00495).
- For any system out of service for more than six months, have a certified technician complete both tank and piping tightness tests to detect a release as small as 0.1 gallon per hour.
- Ensure that an approved method of release detection is in use.
- Obtain acceptable financial assurance.
- Ensure that approved methods of spill and overfill prevention and control are in use.
- File an amended UST registration within 30 days after returning your UST to service using the UST Registration and Self-Certification Form (TCEQ-00724).

What records must I keep while my UST is temporarily out of service?

At a minimum, records of the following must be maintained for at least five years after the UST system is temporarily removed from service:

- The date of temporary removal from service.
- The name, address, and telephone number of any person who prepared the UST system for temporary removal from service.
- The procedures used to prepare and empty the system.
- Any requests for, and approvals of, extensions of time.

Once the UST has been returned to service, maintain the following information:

- the date returned to service;
- the name, address, and telephone number of any person who conducted the tank and piping tightness tests; and
- the results of those tests.

Where do I find more information?

The complete requirements for temporary removal from service for an UST are at 30 TAC 334.54 and 30 TAC 37, Subchapter I.

Additional information on management of USTs can be found in the following TCEQ publications:

- *Licensed Underground Storage Tank Contractors* (RG-475c)
- *Permanently Removing Petroleum Storage Tanks from Service* (RG-475m)
- *Protecting Petroleum Storage Tanks against Corrosion* (RG-475f)
- *Petroleum Storage Tank Release Detection and Inventory Control* (RG-475g)
- *Suspected Releases from Petroleum Storage Tanks* (RG-475h)
- *Petroleum Storage Tank Spill and Overfill Prevention* (RG-475e)
- *Financial Assurance for Petroleum Storage Tanks* (RG-475i)

You can download forms from the TCEQ's Web site at <www.tceq.state.tx.us/forms>.

You can download publications from the TCEQ's Web site at <www.tceq.state.tx.us/publications>.

For confidential environmental compliance assistance for small businesses and local governments, contact Small Business and Local Government Assistance via the hot line at 800-447-2827 or online at www.sblga.info.

TCEQ REGULATORY GUIDANCE
Small Business and Environmental Assistance Division
RG-475m ● August 2009

Permanently Removing Petroleum Storage Tanks from Service

A guide for owners and operators of underground storage tanks

Introduction

This is a general guide to laws and regulations about underground storage tanks and an aid in minimizing potential risks; it does not replace those laws and regulations, which take precedence over any information contained herein. If your tank system is located in Kinney, Uvalde, Medina, Bexar, Comal, Hays, Travis, or Williamson County, additional requirements related to the protection of the Edwards or the Trinity Aquifer may apply (Title 30, Texas Administrative Code [30 TAC], Chapters 213 and 214). Besides the TCEQ, local governments and other state and federal agencies may have rules that apply. The owner and operator are responsible for ensuring compliance with all applicable regulations.

Why would I want to permanently remove my tanks from service?

There is always a risk that your tank will release a regulated substance leading to costly remediation and cleanup fees. To minimize your risk, when your operations no longer require the service of a UST you should permanently remove it.

What are my options?

There are three options for permanently removing your UST from service: remove the tank from the ground, permanently fill the tank in place, or conduct a permanent change in service. Each option has benefits and disadvantages over the other options.

1. Removing the tank from the ground eliminates the chance of future soil contamination. However, it may not be a viable solution if the UST is under a permanent structure.
2. Permanently filling your UST with an inert material may make your property harder to sell in the future, as compared with the other options. A lender or a potential buyer may require additional sampling to ensure that there is no soil contamination. You should also contact the city and county governments to make sure abandonment in place is allowed in your locality.

3. If you carry out a change in service, you must use your UST for a beneficial purpose and the tank must be thoroughly cleaned of all regulated substances prior to reuse. Thoroughly cleaning the UST to prevent contaminating the new stored substance is difficult and may be impractical.

In addition to the benefits and disadvantages of each option, the cost may vary. To determine the best solution, you should discuss with your TCEQ-registered contractor the benefits, disadvantages, and costs of each option.

What requirements apply to each option?

In addition to the general requirements that apply to permanent removal from service, there are specific requirements for each option (**Table 1**).

What records do I need to keep?

Generally you should maintain records of installation and major repair for the life of the UST and records of testing, inspections, basic maintenance, and daily operations for five years. Records of the following must be maintained as long as any UST remains at the facility, or for five years after the final UST is permanently removed from service:

- construction notification and TCEQ approval to permanently remove the UST from service
- the location of the UST permanently removed from service
- the date the UST was permanently removed from service
- methods used to prepare and condition the UST for permanent removal from service
- names, addresses, and phone numbers of all persons who permanently removed the UST from service
- site-assessment reports
- known substance releases
- for any UST removed from the ground, the methods used to handle, transport, store, and dispose of the tank

How can I find a licensed UST contractor and supervisor in my local area?

The TCEQ administers licenses for UST contractors and supervisors. You can find a UST contractor or supervisor in your local area at the TCEQ Web site: <www5.tceq.state.tx.us/oce/olwe/>. For additional information, see *Licensed Underground Storage Tank Contractors* (TCEQ publication RG-475c).

Table 1. Requirements that apply to permanent removal of USTs from service.

	Remove Tank from Ground	Permanently Fill Tank	Change in Service
Notify TCEQ 30 days prior to removal (submit Form TCEQ-00495)	X	X	X
Notify (and, if necessary, get approval from) local government and fire marshal	X	X	X
Notify TCEQ regional office 24 to 72 hours prior to removal	X	X	X
Empty UST of all regulated substance and accumulated sludge, and purge vapors	X	X	X
Collect samples and assess site to determine if any substances released (submit Form TCEQ-00621)	X	X	X
Empty; disconnect; and plug, cap, or remove tank, piping, and ancillary equipment	X	X	
Remove UST from site within 24 hours	X		
During temporary storage, ensure no ignition sources are present and prevent unauthorized personnel access	X	X	X
Do not store materials for human consumption in the tank	X	X	X
Mark on the tank *flammable, unusable for storage of materials for human consumption*, and list its prior contents in lettering at least 2 inches high	X		
Fill tank with inert material		X	
Notify owners of abandoned tank		X	
Update UST registration form (submit Form TCEQ-00724)	X	X	X
Maintain records of removal	X	X	X

For the site assessment, how many samples must be collected and where should I sample?

The sampling methods, types, location, and number of samples depend on your site. To ensure that any release of a regulated substance is detected and quantified, you must consider the following when designing your sampling plan:

- how your UST is being removed from service
- characteristics of the substance you stored
- characteristics of the backfill material and surrounding soils
- whether groundwater is present, and (if so) its depth with relation to the UST system and the surface of the ground

For additional information on collecting samples, see *Investigating and Reporting Releases from Petroleum Storage Tanks* (RG-411). *Note:* financial assurance must be maintained until sampling results have been obtained and corrective action, if required, has been completed.

Am I required to use a registered UST contractor to conduct soil and groundwater sampling?

It is not a requirement that a registered UST contractor take the samples for your UST site assessment. Rule 30 TAC 334.55 states that any "qualified personnel possessing the appropriate skills, experience, and competence to perform the assessment in accordance with recognized industry standards" are allowed to take the necessary samples. However, the person taking the samples must "be supervised by a person who is currently licensed by the TCEQ as a UST installer or on-site supervisor or currently registered with the TCEQ as a corrective action project manager."

Can I empty my UST but not permanently remove it from service?

USTs that are emptied, cleaned, and secured but not permanently removed from service are considered temporarily removed from service. USTs temporarily removed from service must maintain corrosion protection and meet all the requirements of 30 TAC 334.54. For additional guidance, see *Temporarily Removing Petroleum Storage Tanks from Service* (RG-475l).

Where do I find more information?

The complete requirements for permanent removal from service of a UST can be found at 30 TAC 334.55.

You can download forms from the TCEQ's Web site at <www.tceq.state.tx.us/forms>.

You can download publications from the TCEQ's Web site at <www.tceq.state.tx.us/publications>.

For confidential environmental compliance assistance for small businesses and local governments, contact Small Business and Local Government Assistance via the hot line at 800-447-2827 or online at <www.sblga.info>.

TCEQ REGULATORY GUIDANCE

Small Business and Environmental Assistance Division
RG-475n ● February 2012

Aboveground Petroleum Storage Tanks

A guide for owners and operators of ASTs

This is a general guide to laws and regulations for aboveground storage tanks and an aid in minimizing potential risks; it does not replace those laws and regulations, which take precedence over any information in this publication. If your tank system is located in Kinney, Uvalde, Medina, Bexar, Comal, Hays, Travis, or Williamson County, additional requirements related to the protection of the Edwards or the Trinity Aquifer may apply (Title 30, Texas Administrative Code [30 TAC], Chapters 213 and 214). In addition to the laws and TCEQ rules, local governments and other state and federal agencies may have rules that apply. The owner and operator are responsible for ensuring compliance with all applicable laws and regulations.

How do I know if my AST is regulated?

TCEQ rules regulate ASTs with a capacity of more than 1,100 gallons that contain a petroleum product capable of propelling a motor vehicle or airplane (excluding jet fuel). For a definition of "petroleum product" please refer to 30 TAC 334.2(79).

Is my AST exempt?

Some tanks that meet the following specifications may be exempt from registration. These include:

- a farm or residential tank with a capacity of 1,100 gallons or less used for noncommercial purposes;
- a tank used for storing heating oil;
- a flow-through process tank;
- a tank associated with the exploration, development, or production of oil, gas, or geothermal resources, or any other activity regulated by the Railroad Commission of Texas;
- a tank that is associated with a petrochemical plant, petroleum refinery, or electric generating facility;
- a septic tank;
- a surface impoundment pit, pond, or lagoon;
- a stormwater or wastewater collection system;
- a tank located on or above the surface of the floor of an underground area, such as a basement, cellar, mineworking drift, shaft, or tunnel, if the sole or principal substance in the tank is a hazardous substance.

If you claim an exemption for your tank, you must be prepared to provide appropriate documentation to support the claim at the request of the TCEQ.

How do I register my tanks?

Complete form TCEQ-00659, available online at <www.tceq.texas.gov/search_forms.html>. All ASTs located at the same address must be included on the same registration form. If you own or operate tanks at different locations, you must file separate registration forms for each facility.

What if something changes?

You must submit a new aboveground storage tank form TCEQ-00659 (available at <www.tceq.texas.gov/search_forms.html>) to the agency within 30 days of any changes regarding an AST, such as:

- operational status
- condition
- substance stored
- ownership
- location of records
- number of tanks at the facility
- any change in contact information

Do I have to pay a fee?

As of Sept. 1, 2007, AST owners are no longer being assessed annual registration fees. Any fee assessed before that date remains the owner's responsibility.

What if I want to install a new or replacement AST?

- At least 30 days before you begin work on a new or replacement AST, submit a construction notification form (TCEQ-00495) to the applicable TCEQ regional office.

- Between 24 and 72 hours before work begins, contact the appropriate TCEQ office for the region where the activity is to occur to report the time you will begin installation.

To determine which regional office you should notify, please visit <www.tceq.texas.gov/about/directory/region/reglist.html>.

What records do I need to keep?

You should keep copies of all records that document compliance with applicable rules. These include, but are not limited to, your construction notification, registration, tank-manufacturing information, receipts of payments, reports, plans, and certifications. It is best to keep your documents for at least five years, even when it is not required.

What about skid tanks?

- Skid tanks must be registered and labeled with the TCEQ-designated ID number.
- Complete a new registration form each time the tank is moved to a different location **or** register the tanks at a primary business location; continuously maintain accurate records of the location, status, and type of petroleum product stored.
- Keep the records at the facility where the tank is registered.

What if my tank leaks?

An owner or operator of an AST must report a suspected or confirmed release to the TCEQ in the following cases:

- A spill or overfill that results in a release to the environment that exceeds 25 gallons or that causes a sheen on nearby surface water.
- A spill or overfill of less than 25 gallons, if the cleanup cannot be accomplished within 24 hours.

Please refer to Suspected Releases from Petroleum Storage Tanks (TCEQ publication RG-475h) for more information on this subject.

Do I need financial assurance?

For ASTs, financial assurance is not required under TCEQ rules.

Where to find more information?

State requirements for aboveground storage tanks appear in Title 30, Texas Administrative Code, Chapter 334, Subchapters A and F, and Chapter 213.

U.S. Environmental Protection Agency requirements are at Title 40, Code of Federal Regulations, Part 112.

Download forms from the TCEQ's website:
<www.tceq.texas.gov/search_forms.html>

Search for publications at the TCEQ's website:
<www.tceq.texas.gov/assistance/industry/pst/pst.html>

For information on cleanup requirements or on compliance with AST rules, you may contact the Remediation Division at 512-239-2200.

For confidential environmental compliance assistance for small businesses and local governments, contact Small Business and Local Government Assistance via its hotline at 800-447-2827 or online at <www.TexasEnviroHelp.org>.

TCEQ REGULATORY GUIDANCE
Small Business and Environmental Assistance Division
RG-475o ● May 2012

Training for Underground Storage Tank Operators

A guide for owners and operators of USTs

This is a general guide to laws and regulations for underground storage tanks and an aid in minimizing potential risks; it does not replace those laws and regulations, which take precedence over any information in this publication. If your UST system is located in Kinney, Uvalde, Medina, Bexar, Comal, Hays, Travis, or Williamson County, additional requirements related to the protection of the Edwards or the Trinity Aquifer may apply (Title 30, Texas Administrative Code [30 TAC], Chapters 213 and 214). In addition to the laws and TCEQ rules, local governments and other state and federal agencies may have rules that apply. The owner and operator are responsible for ensuring compliance with all applicable laws and regulations.

Who must be trained?

As required by federal legislation, the TCEQ has adopted regulations requiring owners and operators of UST systems to be trained in performing compliance functions at their facilities. Owners and operators of regulated UST systems must comply with the operator-training requirements listed in 30 TAC 334.601–06.

Effective August 8, 2012 each facility must have at least one named individual certified for each class of operator—classes A, B, and C. One person may hold more than one operator classification. During hours of operation, at least one certified operator must be present at the facility at all times.

Operator training is not the same as Stage II facility-representative training. Operator training is required for all UST facilities statewide under 30 TAC 334.601–06. Stage II facility-representative training is required for all Stage II facilities in the nonattainment counties under 30 TAC 115. 248. If you are in a Stage II nonattainment county (see Module 475j), you are required to have both the operator training and the Stage II facility-representative training.

What are the three classes of operators, and how do they differ?

A **Class A operator** has the primary responsibility of ensuring the proper operation and maintenance of a UST system. Class A operators must also know the regulations that apply to UST systems, including an understanding of:

- registration
- system components
- product compatibility
- spill and overfill prevention
- corrosion protection
- release detection
- record keeping
- notification
- release reporting and response
- temporary and permanent closure
- operator training
- financial responsibility

This role is typically filled by the facility owner.

A **Class B operator** has the primary responsibility of implementing all applicable requirements of these regulations in the field, implementing day-to-day aspects of the operation and maintenance of the UST system. These responsibilities include a detailed knowledge of all the components listed above for a Class A operator. Also, the designated Class B operator for a facility must ensure that all Class C operators at that facility receive the required training.

This role is typically filled by the facility manager.

A **Class C operator** of a UST system must be trained in both general and facility-specific emergency-response procedures. This knowledge must include an understanding of:

- the operation of the emergency shutoff equipment;
- the initial response procedures following system alarm warnings;
- the first-response actions to releases, spills, or overfills; and
- how to notify emergency responders and the designated Class A and Class B operators of the UST system.

Class A and Class B operators are responsible for maintaining the emergency procedures on-site for easy access by Class C operators.

This role is typically filled by the facility clerks.

What type of training is required?

Class A and B operators must complete a TCEQ-approved operator training course or process, which **may** include classroom or online training performed by, contracted for, or approved by the TCEQ, and **must** include an evaluation of operator knowledge through testing, practical demonstration, or other tools the TCEQ accepts. The approved training providers must verify the training via a

written or electronic certificate stating the classification and date. Every certificate must be maintained at the UST facility, and a copy submitted to the TCEQ at annual self-certification.

Class C operator-training programs must meet the minimum requirements of the TCEQ rule. Their format can be in-class, hands-on, online or any other deemed acceptable by the Class B operator. A Class B operator must give the owner or operator of the UST facility a document—after signing, dating, and verifying it—that lists all trained Class C operators for the facility. The list must include the dates of their training and must be kept current with any personnel changes.

When is the training deadline and how often must operators take courses?

Aug. 8, 2012, is the deadline for UST systems to have designated and trained Class A, Class B, and Class C operators. Class A and Class B operators designated after Aug. 8, 2012 must have passed an acceptable operator-training course before assuming operation and maintenance responsibilities for the UST system. Class C operators designated after Aug. 8, 2012, must have passed an acceptable operator-training course before assuming unsupervised responsibilities for responding to emergencies at the facility.

All Class A, Class B, and Class C operators must be retrained within three years of their last training date. Class C operator training is only applicable at the specific facility for which the training was provided.

Training deadlines

Class A	Every 3 years	TCEQ-approved training
Class B	Every 3 years*	TCEQ-approved training
Class C	Every 3 years	Training approved or given by Class B operator

*If the owner or operator of a UST facility receives a notice of violation and the TCEQ determines that the facility is in significant noncompliance, the Class B operator must retake the TCEQ-approved compliance class that addresses the noted noncompliance areas within a time frame the agency sets. Significant noncompliance includes the failure to provide release detection, spill and overfill prevention, corrosion protection, or financial assurance.

How can I find the required training courses?

To find an approved training provider, please see the list linked from *Petroleum Storage Tank* at <www.tceq.texas.gov/goto/ust-training>.

What records do I need to keep?

Owners and operators of UST facilities must maintain required operator-training certificates on-site. Documentation may be maintained off-site electronically, if the facility can produce a clear printed copy to the TCEQ within 72 hours of an investigation.

Where can I find more information?

For confidential, environmental compliance assistance for small businesses and local governments, contact Small Business and Local Government Assistance via its hotline at 800-447-2827 or online at <www.TexasEnviroHelp.org>.

For more information about the new UST operator-training rules, you may also contact the TCEQ's Remediation Division—PST Section at 512-239-2200, or e-mail <psttech@tceq.texas.gov>.